WIRING DIAGRAMS

All diagrams contained in this manual are based on the latest product information available at the time of publication approval. The right is reserved to make changes at any time without notice.

CONTENTS

WIRING DIAGRAMS DESCRIPTION

These diagrams use a new format. The diagram is surrounded by a alpha/numeric location grid. The wires have alpha/numeric addresses at the connectors, showing where the other end of the wire is located according to the grid.

The connectors are shown with end-on views. Each circuit is located in the connector by circuit number.

The diagrams are laid out to represent the physical harness, not the electrical schematic. The only electrical connections shown are the splices in the harness. The individual wires are shown at the connectors.

The wire address is as follows:

9A B9 0.5 BRN. 9A is the wire circuit number. B9 is the location of the other end of the wire. 0.5 is the size of the wire in millimeters squared. BRN is the color of the wire insulation. If the wire ends at a connector which joins to a connector on another page, the page number and alpha/numeric address of the other connector will be shown.

Abbreviations and symbols used for indicating wire insulation colors and patterns are as follows:

BLK	Black	ORG	Orange
BRN	Brown	PPL	Purple
CH	Check	TR	Tracer
CR	Cross	YEL	Yellow
GRN	Green	//	Parallel
NAT	Natural	WHT	White
LT	Light	BLU	Blue
SGL	Single	STR	Stripe
ORN	Orange	PNK	Pink
GRA	Gray	DK	Dark

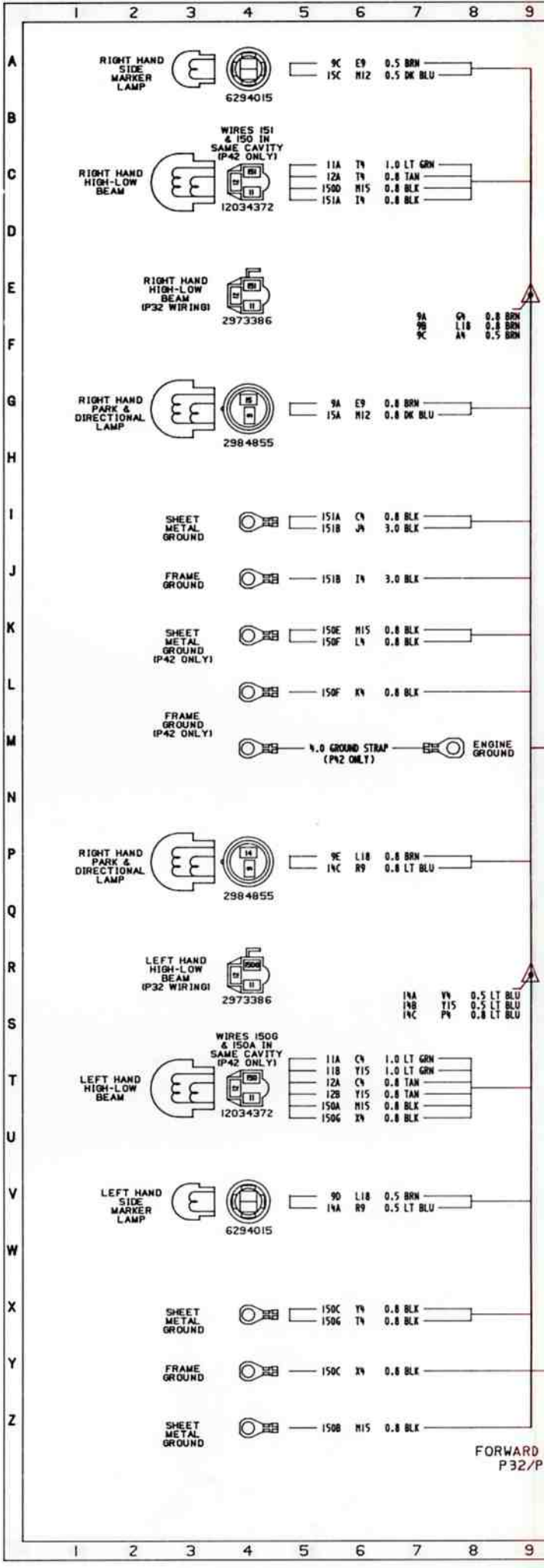
RIGHT HAND SIDE MARKER LAMP
6294015
9C E9 0.5 BRN
15C M12 0.5 DK BLU
WIRES 151 & 150 IN SAME CAVITY (P42 ONLY)
RIGHT HAND HIGH-LOW BEAM
12034372
11A T9 1.0 LT GRN
12A T9 0.8 TAN
150D M15 0.8 BLK
151A I9 0.8 BLK
RIGHT HAND HIGH-LOW BEAM (P32 WIRING)
2973386
9A G9 0.8 BRN
9B L18 0.8 BRN
9C A9 0.5 BRN
RIGHT HAND PARK & DIRECTIONAL LAMP
2984855
9A E9 0.8 BRN
15A M12 0.8 DK BLU
SHEET METAL GROUND
151A C9 0.8 BLK
151B J9 3.0 BLK
FRAME GROUND
151B I9 3.0 BLK
SHEET METAL GROUND (P42 ONLY)
150E M15 0.8 BLK
150F L9 0.8 BLK
150F K9 0.8 BLK
FRAME GROUND (P42 ONLY)
4.0 GROUND STRAP (P42 ONLY)
ENGINE GROUND
RIGHT HAND PARK & DIRECTIONAL LAMP
2984855
9E L18 0.8 BRN
14C R9 0.8 LT BLU
LEFT HAND HIGH-LOW BEAM (P32 WIRING)
2973386
14A Y9 0.5 LT BLU
14B Y15 0.5 LT BLU
14C P9 0.8 LT BLU
WIRES 150G & 150A IN SAME CAVITY (P42 ONLY)
LEFT HAND HIGH-LOW BEAM
12034372
11A C9 1.0 LT GRN
11B Y15 1.0 LT GRN
12A C9 0.8 TAN
12B Y15 0.8 TAN
150A M15 0.8 BLK
150G X9 0.8 BLK
LEFT HAND SIDE MARKER LAMP
6294015
9D L18 0.5 BRN
14A R9 0.5 LT BLU
SHEET METAL GROUND
150C Y9 0.8 BLK
150G T9 0.8 BLK
FRAME GROUND
150C X9 0.8 BLK
SHEET METAL GROUND
150B M15 0.8 BLK
FORWARD
P32/P

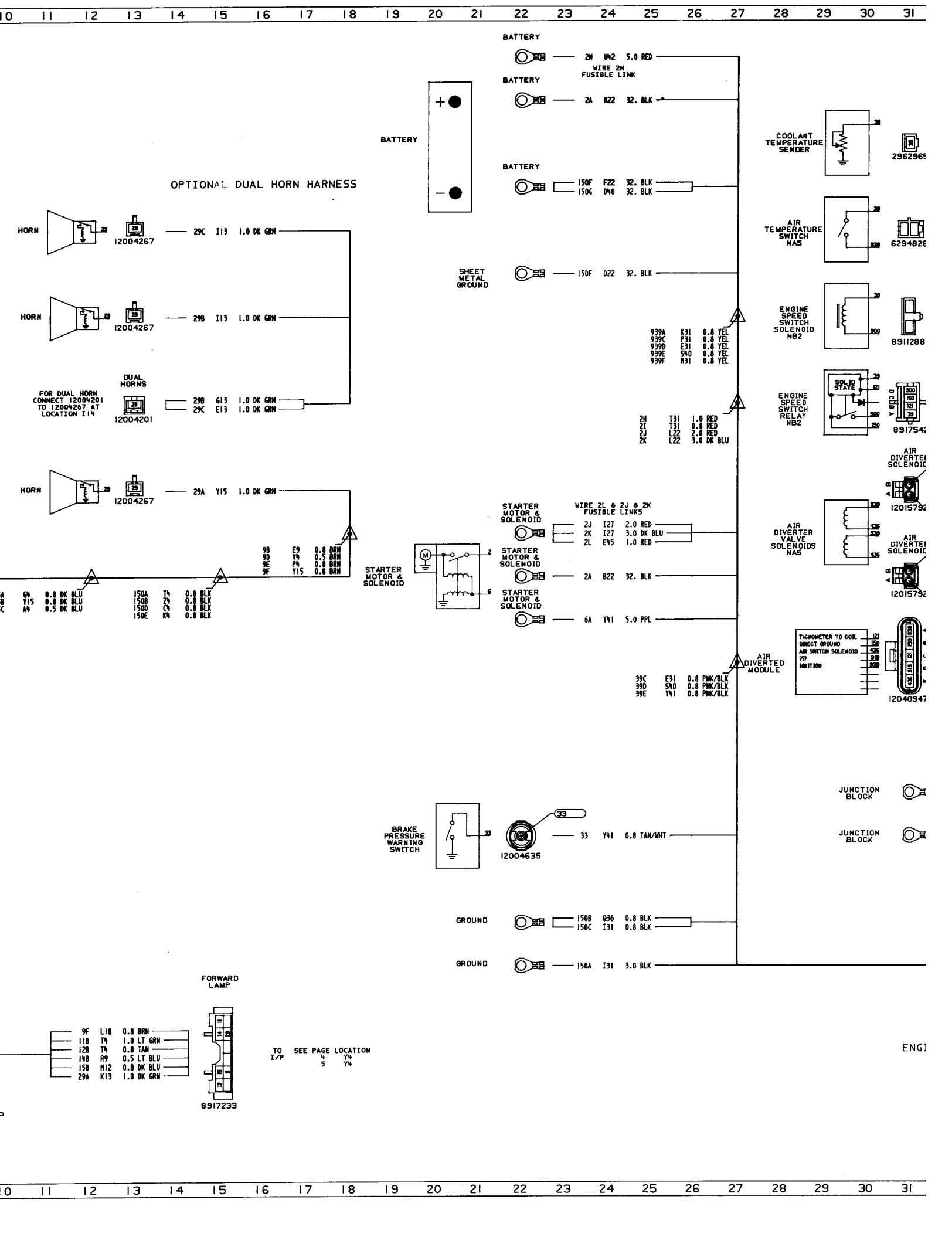
10 11 12 13 14 15 16 17 18 19 20 21 22 23 24 25 26 27 28 29 30 31
BATTERY
2N U42 5.0 RED
WIRE 2N FUSIBLE LINK
BATTERY
2A M22 32. BLK
BATTERY
BATTERY
150F F22 32. BLK
150G D40 32. BLK
OPTIONAL DUAL HORN HARNESS
HORN
12004267
29C I13 1.0 DK GRN
HORN
12004267
29B I13 1.0 DK GRN
SHEET METAL GROUND
150F D22 32. BLK
939A K31 0.8 YEL
939C P31 0.8 YEL
939D E31 0.8 YEL
939E S40 0.8 YEL
939F M31 0.8 YEL
DUAL HORNS
FOR DUAL HORN CONNECT 12004201 TO 12004267 AT LOCATION I14
12004201
29B G13 1.0 DK GRN
29C E13 1.0 DK GRN
2H T31 1.0 RED
2I T31 0.8 RED
2J L22 2.0 RED
2K L22 3.0 DK BLU
HORN
12004267
29A Y15 1.0 DK GRN
9B E9 0.8 BRN
9D Y4 0.5 BRN
9E P4 0.8 BRN
9F Y15 0.8 BRN
STARTER MOTOR & SOLENOID
WIRE 2L & 2J & 2K FUSIBLE LINKS
2J I27 2.0 RED
2K I27 3.0 DK BLU
2L E45 1.0 RED
STARTER MOTOR & SOLENOID
2A B22 32. BLK
STARTER MOTOR & SOLENOID
6A Y41 5.0 PPL
39C E31 0.8 PNK/BLK
39D S40 0.8 PNK/BLK
39E Y41 0.8 PNK/BLK
AIR DIVERTED MODULE
TACHOMETER TO COIL
DIRECT GROUND
AIR SWITCH SOLENOID
???
IGNITION
12040947
BRAKE PRESSURE WARNING SWITCH
33
12004635
33 Y41 0.8 TAN/WHT
GROUND
150B Q36 0.8 BLK
150C I31 0.8 BLK
GROUND
150A I31 3.0 BLK
COOLANT TEMPERATURE SENDER
AIR TEMPERATURE SWITCH NA5
ENGINE SPEED SWITCH SOLENOID NB2
ENGINE SPEED SWITCH RELAY NB2
SOLID STATE
AIR DIVERTER SOLENOID
AIR DIVERTER VALVE SOLENOIDS NA5
AIR DIVERTER SOLENOID
JUNCTION BLOCK
JUNCTION BLOCK
FORWARD LAMP
9F L18 0.8 BRN
11B T4 1.0 LT GRN
12B T4 0.8 TAN
14B R9 0.5 LT BLU
15B M12 0.8 DK BLU
29A K13 1.0 DK GRN
8917233
TO I/P
SEE PAGE LOCATION
4 Y4
5 Y4
ENGI
10 11 12 13 14 15 16 17 18 19 20 21 22 23 24 25 26 27 28 29 30 31

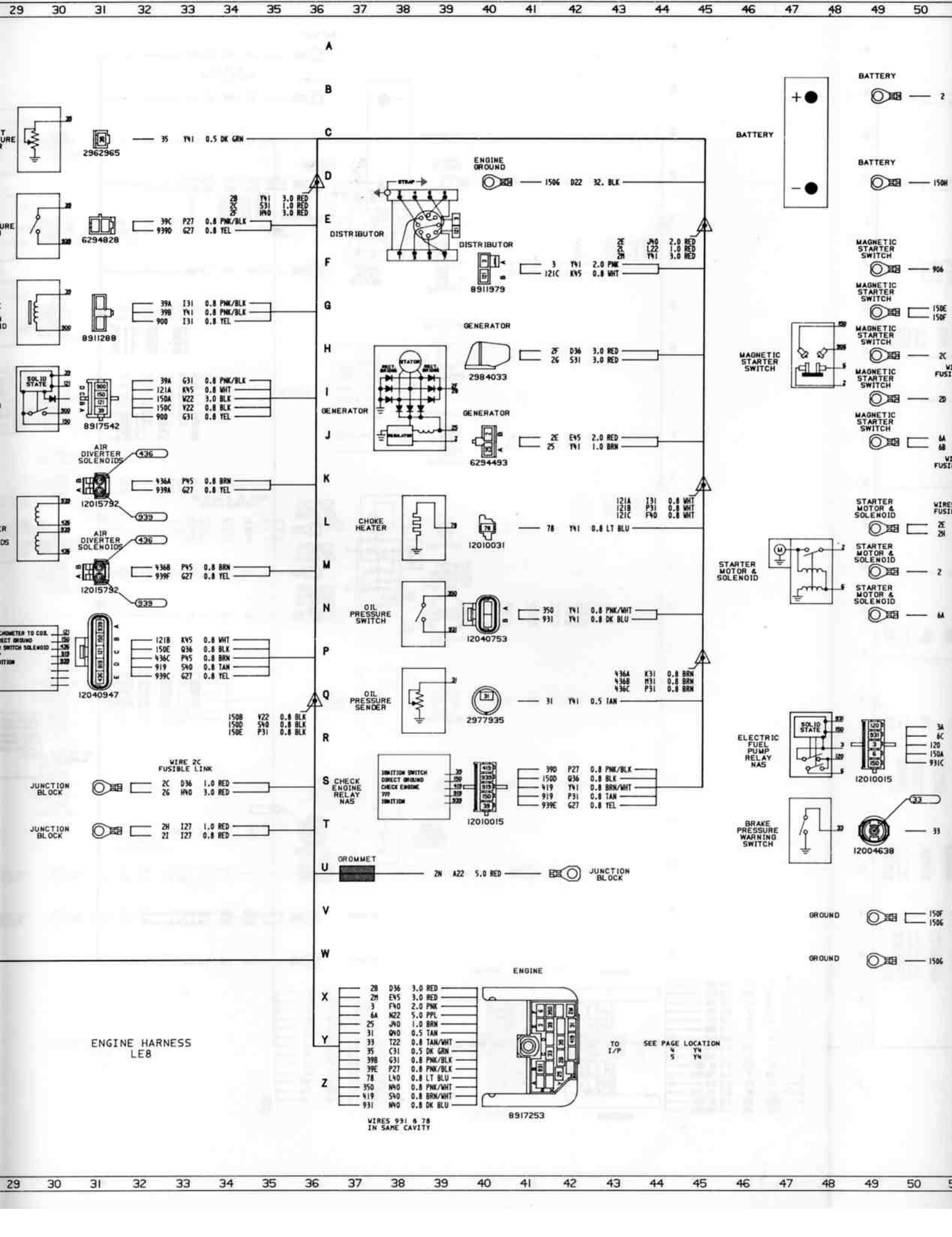
BATTERY
BATTERY
BATTERY
BATTERY
2962965
35 Y41 0.5 DK GRN
ENGINE GROUND
150G D22 32. BLK
6294828
39C P27 0.8 PNK/BLK
939D G27 0.8 YEL
2B Y41 3.0 RED
2C S31 1.0 RED
2E N40 3.0 RED
DISTRIBUTOR
DISTRIBUTOR
8911979
3 Y41 2.0 PNK
121C K45 0.8 WHT
2E J40 2.0 RED
2L L22 1.0 RED
2M Y41 3.0 RED
8911288
39A I31 0.8 PNK/BLK
39B Y41 0.8 PNK/BLK
900 I31 0.8 YEL
GENERATOR
2984033
2F D36 3.0 RED
2G S31 3.0 RED
GENERATOR
GENERATOR
6294493
2E E45 2.0 RED
25 Y41 1.0 BRN
8917542
39A G31 0.8 PNK/BLK
121A K45 0.8 WHT
150A W22 3.0 BLK
150C V22 0.8 BLK
900 G31 0.8 YEL
AIR DIVERTER SOLENOIDS
436
12015792
436A P45 0.8 BRN
939A G27 0.8 YEL
939
AIR DIVERTER SOLENOIDS
436
12015792
436B P45 0.8 BRN
939F G27 0.8 YEL
939
CHOKE HEATER
12010031
78 Y41 0.8 LT BLU
121A I31 0.8 WHT
121B P31 0.8 WHT
121C F40 0.8 WHT
OIL PRESSURE SWITCH
12040753
350 Y41 0.8 PNK/WHT
931 Y41 0.8 DK BLU
12040947
121B K45 0.8 WHT
150E Q36 0.8 BLK
436C P45 0.8 BRN
919 S40 0.8 TAN
939C G27 0.8 YEL
OIL PRESSURE SENDER
2977935
31 Y41 0.5 TAN
436A K31 0.8 BRN
436B M31 0.8 BRN
436C P31 0.8 BRN
150B V22 0.8 BLK
150D S40 0.8 BLK
150E P31 0.8 BLK
WIRE 2C FUSIBLE LINK
JUNCTION BLOCK
2C D36 1.0 RED
2G N40 3.0 RED
JUNCTION BLOCK
2H I27 1.0 RED
2I I27 0.8 RED
CHECK ENGINE RELAY NAS
IGNITION SWITCH
DIRECT GROUND
CHECK ENGINE
???
IGNITION
12010015
390 P27 0.8 PNK/BLK
150D Q36 0.8 BLK
419 Y41 0.8 BRN/WHT
919 P31 0.8 TAN
939E G27 0.8 YEL
GROMMET
2N A22 5.0 RED
JUNCTION BLOCK
MAGNETIC STARTER SWITCH
906
MAGNETIC STARTER SWITCH
150E
150F
MAGNETIC STARTER SWITCH
2C
MAGNETIC STARTER SWITCH
2D
MAGNETIC STARTER SWITCH
6A
6B
STARTER MOTOR & SOLENOID
2E
2H
STARTER MOTOR & SOLENOID
2
STARTER MOTOR & SOLENOID
6A
ELECTRIC FUEL PUMP RELAY NAS
12010015
3A
6C
120
150A
931C
BRAKE PRESSURE WARNING SWITCH
12004638
33
GROUND
150F
150G
GROUND
150G
ENGINE
8917253
2B D36 3.0 RED
2M E45 3.0 RED
3 F40 2.0 PNK
6A N22 5.0 PPL
25 J40 1.0 BRN
31 Q40 0.5 TAN
33 T22 0.8 TAN/WHT
35 C31 0.5 DK GRN
39B G31 0.8 PNK/BLK
39E P27 0.8 PNK/BLK
78 L40 0.8 LT BLU
350 N40 0.8 PNK/WHT
419 S40 0.8 BRN/WHT
931 N40 0.8 DK BLU
WIRES 931 & 78 IN SAME CAVITY
TO I/P
SEE PAGE LOCATION
4 Y4
5 Y4
ENGINE HARNESS LE8

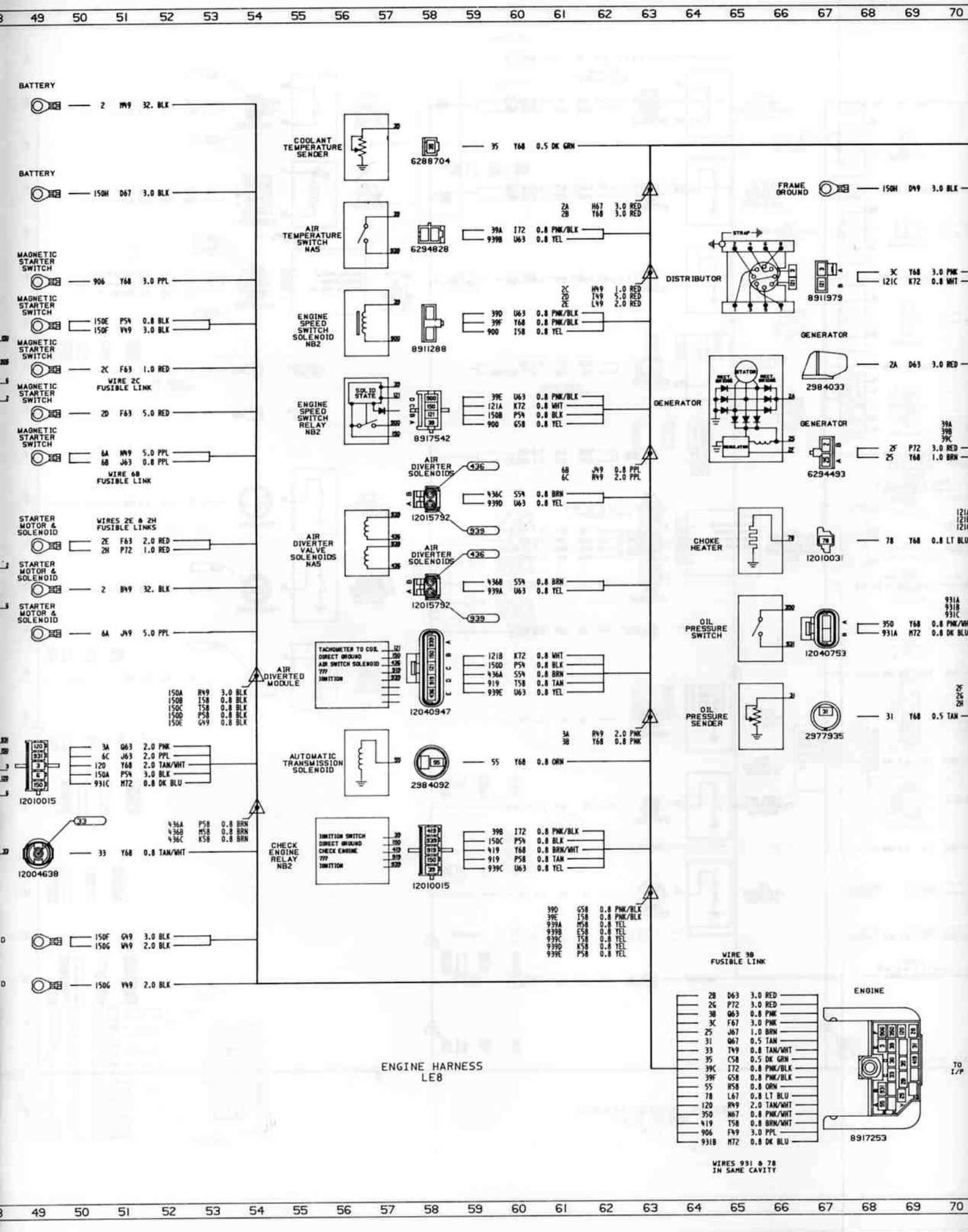
49 50 51 52 53 54 55 56 57 58 59 60 61 62 63 64 65 66 67 68 69 70
BATTERY
2 M49 32. BLK
BATTERY
150H D67 3.0 BLK
MAGNETIC STARTER SWITCH
906 Y68 3.0 PPL
MAGNETIC STARTER SWITCH
150E P54 0.8 BLK
150F W49 3.0 BLK
MAGNETIC STARTER SWITCH
2C F63 1.0 RED
WIRE 2C FUSIBLE LINK
MAGNETIC STARTER SWITCH
2D F63 5.0 RED
MAGNETIC STARTER SWITCH
6A N49 5.0 PPL
6B J63 0.8 PPL
WIRE 6B FUSIBLE LINK
STARTER MOTOR & SOLENOID
WIRES 2E & 2H FUSIBLE LINKS
2E F63 2.0 RED
2H P72 1.0 RED
STARTER MOTOR & SOLENOID
2 B49 32. BLK
STARTER MOTOR & SOLENOID
6A J49 5.0 PPL
150A R49 3.0 BLK
150B T58 0.8 BLK
150C T58 0.8 BLK
150D P58 0.8 BLK
150E G49 0.8 BLK
3A Q63 2.0 PNK
6C J63 2.0 PPL
120 Y68 2.0 TAN/WHT
150A P54 3.0 BLK
931C M72 0.8 DK BLU
12010015
436A P58 0.8 BRN
436B M58 0.8 BRN
436C K58 0.8 BRN
33 Y68 0.8 TAN/WHT
12004638
150F G49 3.0 BLK
150G W49 2.0 BLK
150G W49 2.0 BLK
COOLANT TEMPERATURE SENDER
6288704
35 Y68 0.5 DK GRN
AIR TEMPERATURE SWITCH NA5
6294828
2A H67 3.0 RED
2B Y68 3.0 RED
39A I72 0.8 PNK/BLK
939B U63 0.8 YEL
ENGINE SPEED SWITCH SOLENOID NB2
8911288
2C W49 1.0 RED
2D T49 5.0 RED
2E L49 2.0 RED
39D U63 0.8 PNK/BLK
39F Y68 0.8 PNK/BLK
900 I58 0.8 YEL
ENGINE SPEED SWITCH RELAY NB2
SOLID STATE
8917542
39E U63 0.8 PNK/BLK
121A K72 0.8 WHT
150B P54 0.8 BLK
900 G58 0.8 YEL
AIR DIVERTER SOLENOIDS
436
12015792
939
6B J49 0.8 PPL
6C R49 2.0 PPL
936C S54 0.8 BRN
939D U63 0.8 YEL
AIR DIVERTER VALVE SOLENOIDS NA5
AIR DIVERTER SOLENOIDS
436
12015792
939
936B S54 0.8 BRN
939A U63 0.8 YEL
AIR DIVERTED MODULE
TACHOMETER TO COIL
DIRECT GROUND
AIR SWITCH SOLENOID
777
IGNITION
12040947
121B K72 0.8 WHT
150D P54 0.8 BLK
936A S54 0.8 BRN
919 T58 0.8 TAN
939E U63 0.8 YEL
AUTOMATIC TRANSMISSION SOLENOID
2984092
55 Y68 0.8 ORN
3A R49 2.0 PNK
3B Y68 0.8 PNK
CHECK ENGINE RELAY NB2
IGNITION SWITCH
DIRECT GROUND
CHECK ENGINE
777
IGNITION
12010015
39B I72 0.8 PNK/BLK
150C P54 0.8 BLK
419 Y68 0.8 BRN/WHT
919 P58 0.8 TAN
939C U63 0.8 YEL
39D G58 0.8 PNK/BLK
39E I58 0.8 PNK/BLK
939A M58 0.8 YEL
939B E58 0.8 YEL
939C T58 0.8 YEL
939D K58 0.8 YEL
939E P58 0.8 YEL
FRAME GROUND
150H D49 3.0 BLK
DISTRIBUTOR
STRAP
8911979
3C Y68 3.0 PNK
121C K72 0.8 WHT
GENERATOR
2984033
2A D63 3.0 RED
GENERATOR
STATOR
REGULATOR
GENERATOR
6294493
2F P72 3.0 RED
25 Y68 1.0 BRN
CHOKE HEATER
12010031
78 Y68 0.8 LT BLU
OIL PRESSURE SWITCH
12040753
350 Y68 0.8 PNK/WHT
931A M72 0.8 DK BLU
OIL PRESSURE SENDER
2977935
31 Y68 0.5 TAN
WIRE 3B FUSIBLE LINK
28 D63 3.0 RED
2G P72 3.0 RED
3B Q63 0.8 PNK
3C F67 3.0 PNK
25 J67 1.0 BRN
31 Q67 0.5 TAN
33 T49 0.8 TAN/WHT
35 C58 0.5 DK GRN
39C I72 0.8 PNK/BLK
39F G58 0.8 PNK/BLK
55 R58 0.8 ORN
78 L67 0.8 LT BLU
120 R49 2.0 TAN/WHT
350 N67 0.8 PNK/WHT
419 T58 0.8 BRN/WHT
906 F49 3.0 PPL
931B M72 0.8 DK BLU
WIRES 931 & 78 IN SAME CAVITY
ENGINE
8917253
TO I/P
ENGINE HARNESS
LE8
49 50 51 52 53 54 55 56 57 58 59 60 61 62 63 64 65 66 67 68 69 70

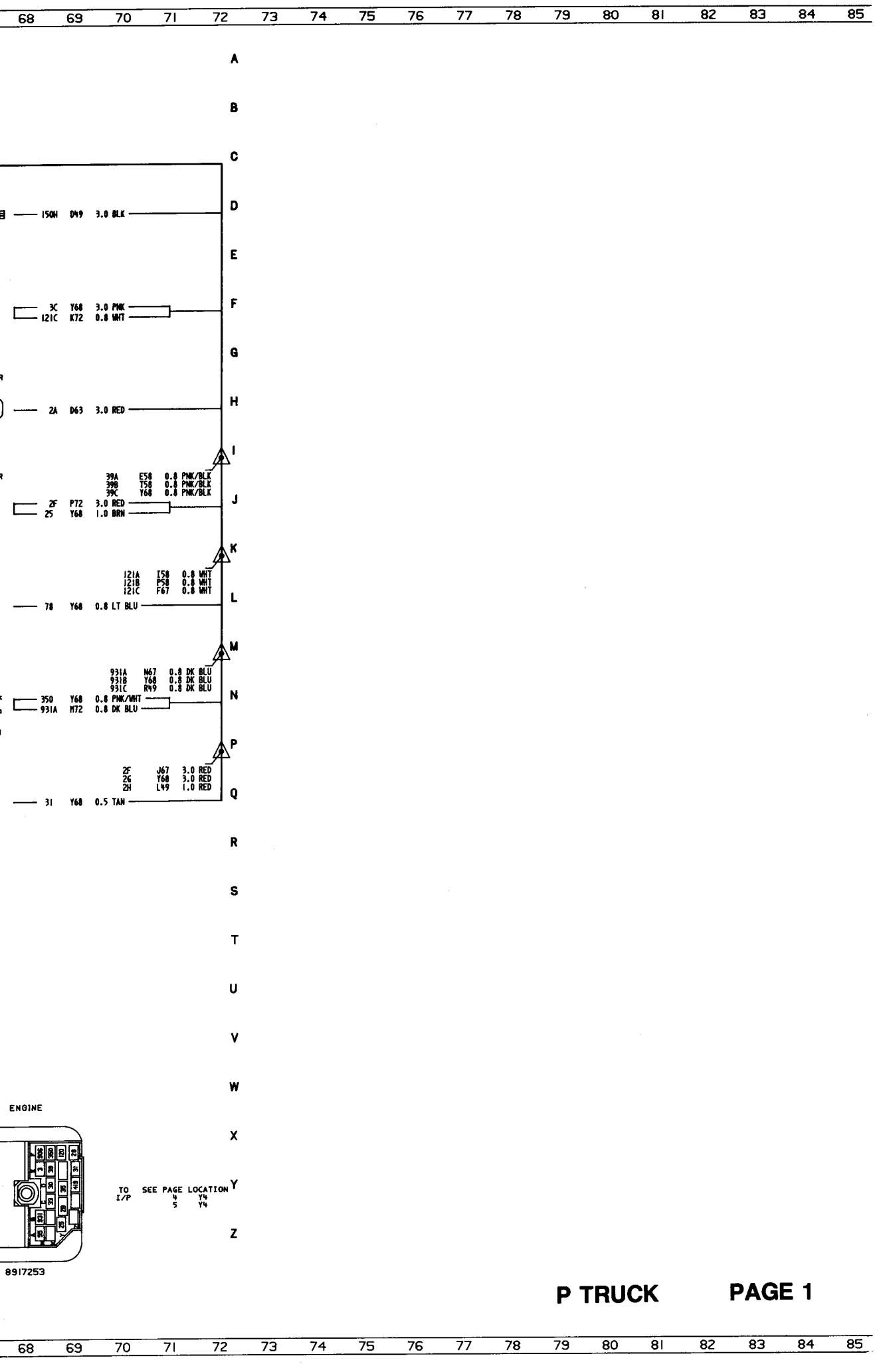

P TRUCK **PAGE 1**

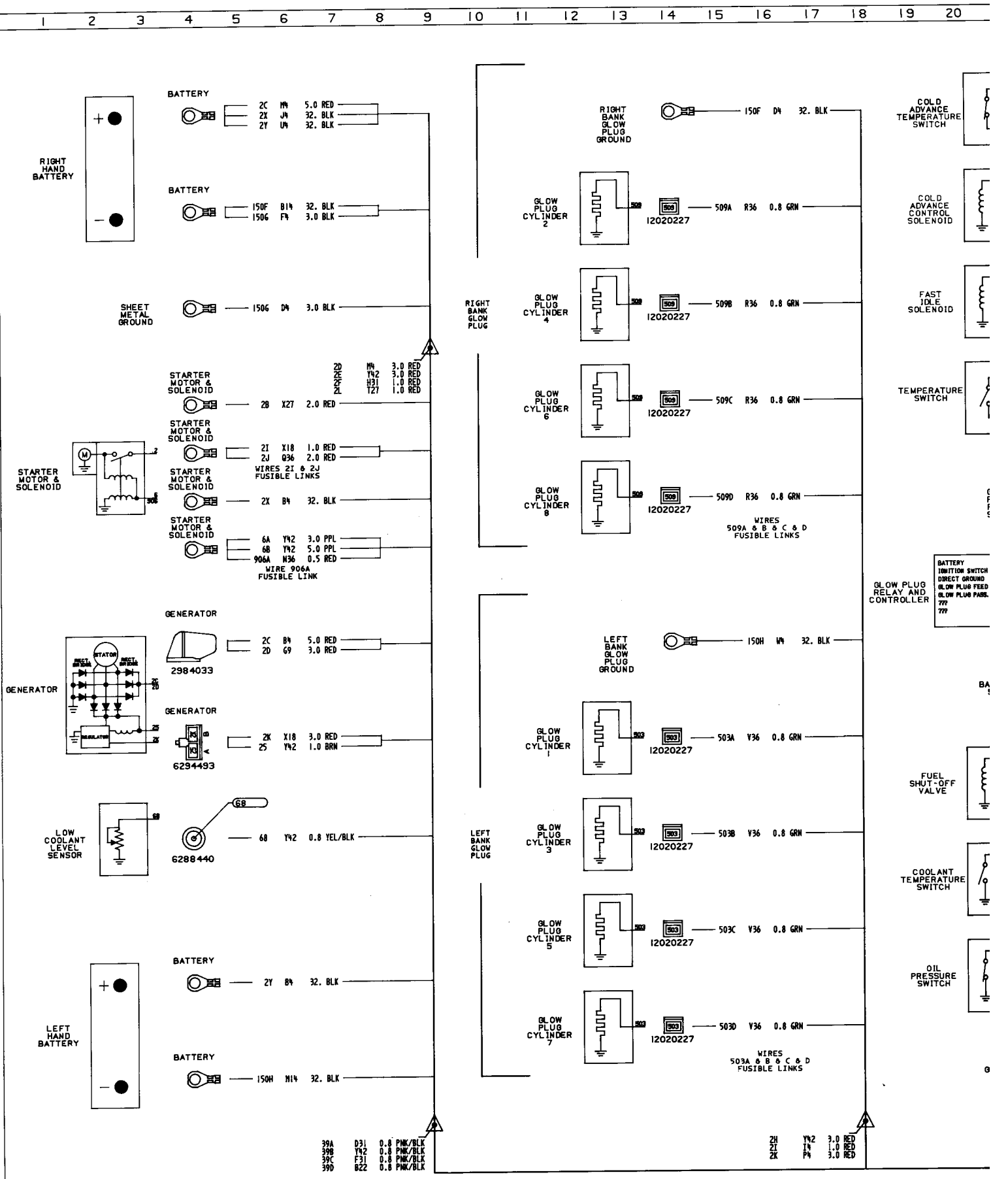

PAGE 2 **P TRUCK**

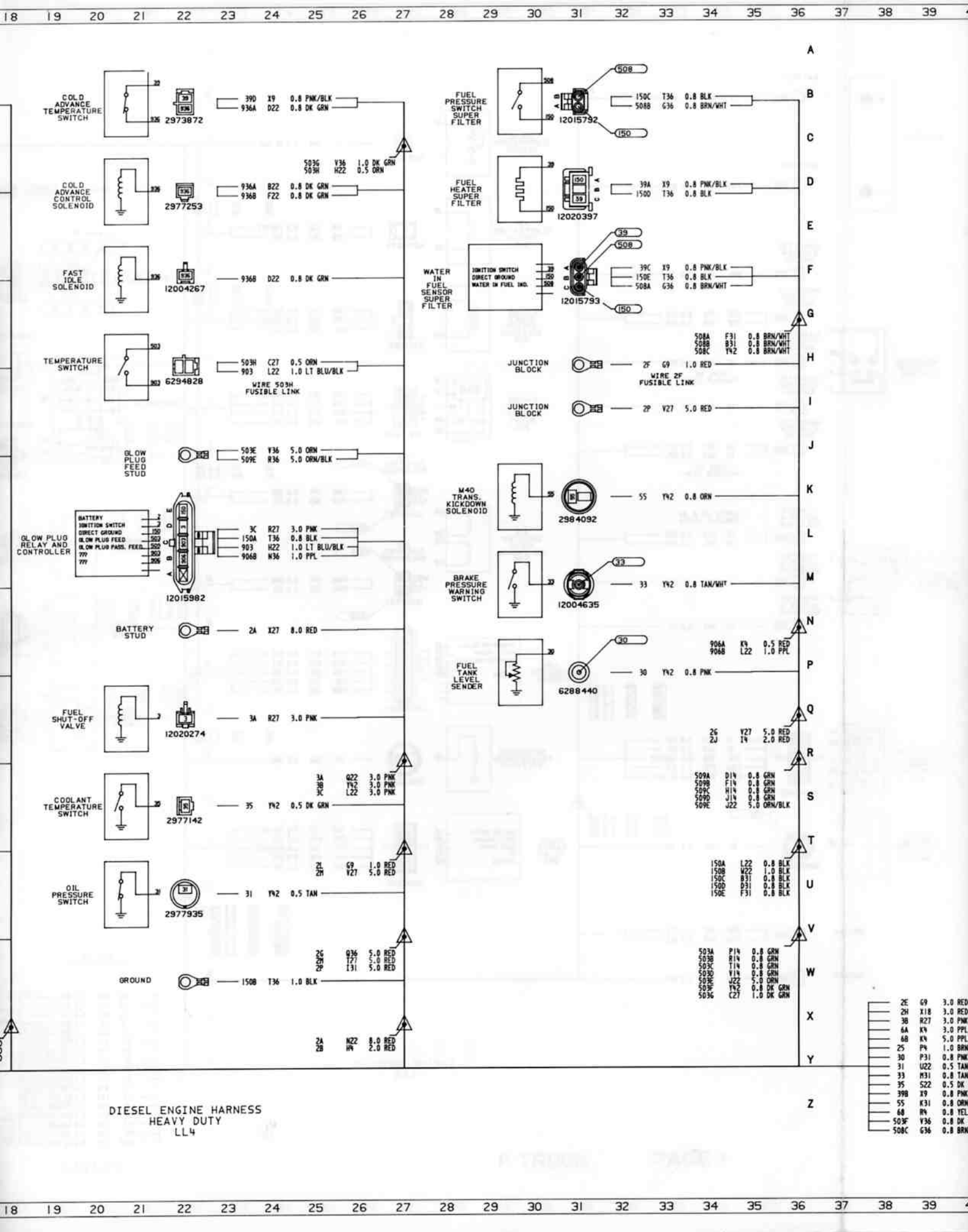

DIESEL ENGINE HARNESS
HEAVY DUTY
LL4

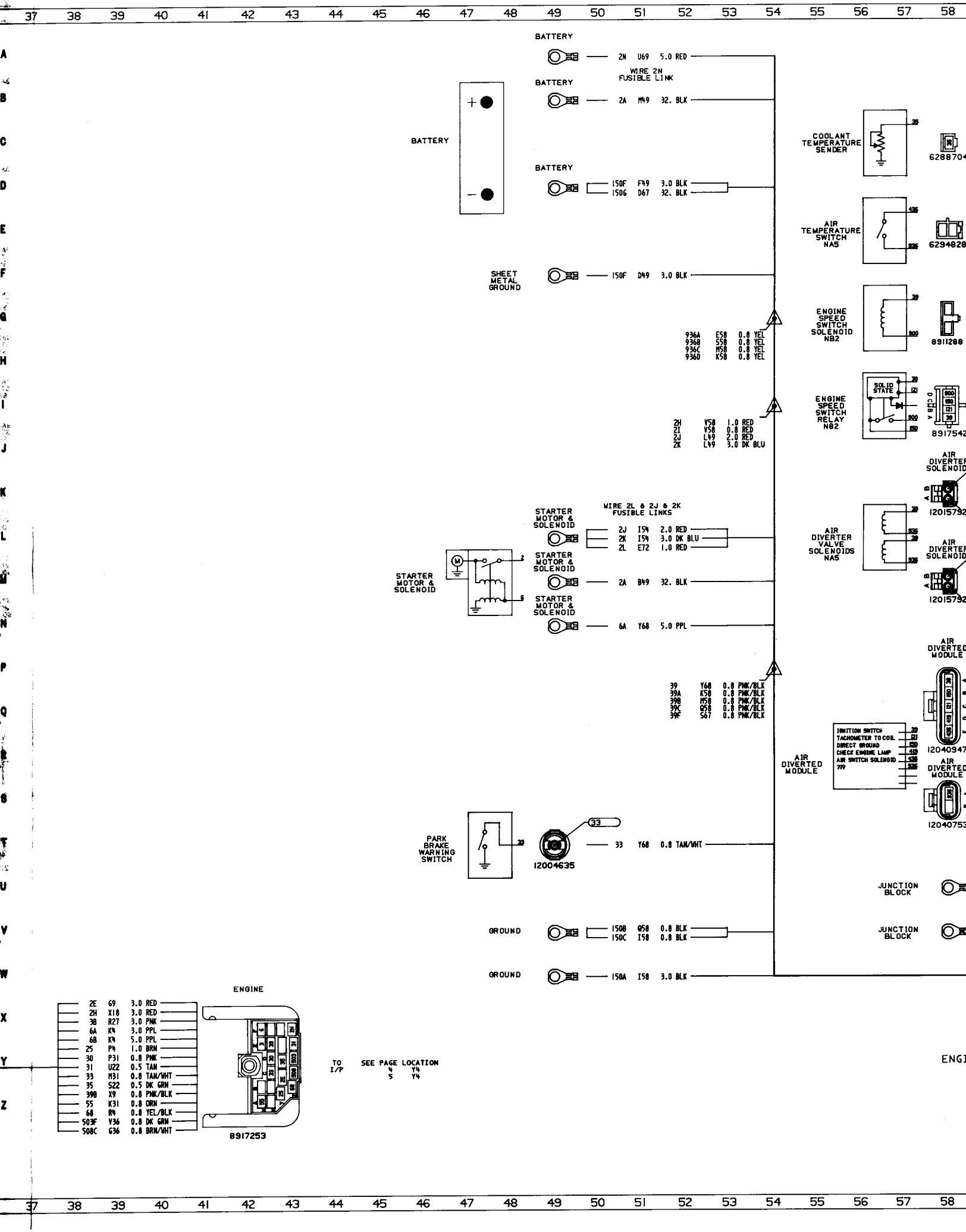
BATTERY
2N U69 5.0 RED
WIRE 2N FUSIBLE LINK
BATTERY
2A M49 32. BLK
BATTERY
150F F49 3.0 BLK
150G D67 32. BLK
SHEET METAL GROUND
150F D49 3.0 BLK
936A E58 0.8 YEL
936B S58 0.8 YEL
936C M58 0.8 YEL
936D K58 0.8 YEL
2H V58 1.0 RED
2I V58 0.8 RED
2J L49 2.0 RED
2K L49 3.0 DK BLU
WIRE 2L & 2J & 2K FUSIBLE LINKS
STARTER MOTOR & SOLENOID
2J I54 2.0 RED
2K I54 3.0 DK BLU
2L E72 1.0 RED
STARTER MOTOR & SOLENOID
2A B49 32. BLK
STARTER MOTOR & SOLENOID
6A Y68 5.0 PPL
39 Y68 0.8 PNK/BLK
39A K58 0.8 PNK/BLK
39B M58 0.8 PNK/BLK
39C Q58 0.8 PNK/BLK
39F S67 0.8 PNK/BLK
PARK BRAKE WARNING SWITCH
12004635
33 Y68 0.8 TAN/WHT
GROUND
150B Q58 0.8 BLK
150C I58 0.8 BLK
GROUND
150A I58 3.0 BLK
COOLANT TEMPERATURE SENDER
6288704
AIR TEMPERATURE SWITCH NA5
6294828
ENGINE SPEED SWITCH SOLENOID NB2
8911288
ENGINE SPEED SWITCH RELAY NB2
SOLID STATE
8917542
AIR DIVERTER SOLENOID
12015792
AIR DIVERTER VALVE SOLENOIDS NA5
AIR DIVERTER SOLENOID
12015792
AIR DIVERTED MODULE
IGNITION SWITCH
TACHOMETER TO COIL
DIRECT GROUND
CHECK ENGINE LAMP
AIR SWITCH SOLENOID
???
12040947
AIR DIVERTED MODULE
12040753
JUNCTION BLOCK
JUNCTION BLOCK
ENGINE
2E G9 3.0 RED
2H X18 3.0 RED
3B R27 3.0 PNK
6A K4 3.0 PPL
6B K4 5.0 PPL
25 P4 1.0 BRN
30 P31 0.8 PNK
31 U22 0.5 TAN
33 M31 0.8 TAN/WHT
35 S22 0.5 DK GRN
39B X9 0.8 PNK/BLK
55 K31 0.8 ORN
68 R4 0.8 YEL/BLK
503F Y36 0.8 DK GRN
508C G36 0.8 BRN/WHT
8917253
TO I/P
SEE PAGE LOCATION
4 Y4
5 Y4
ENGI

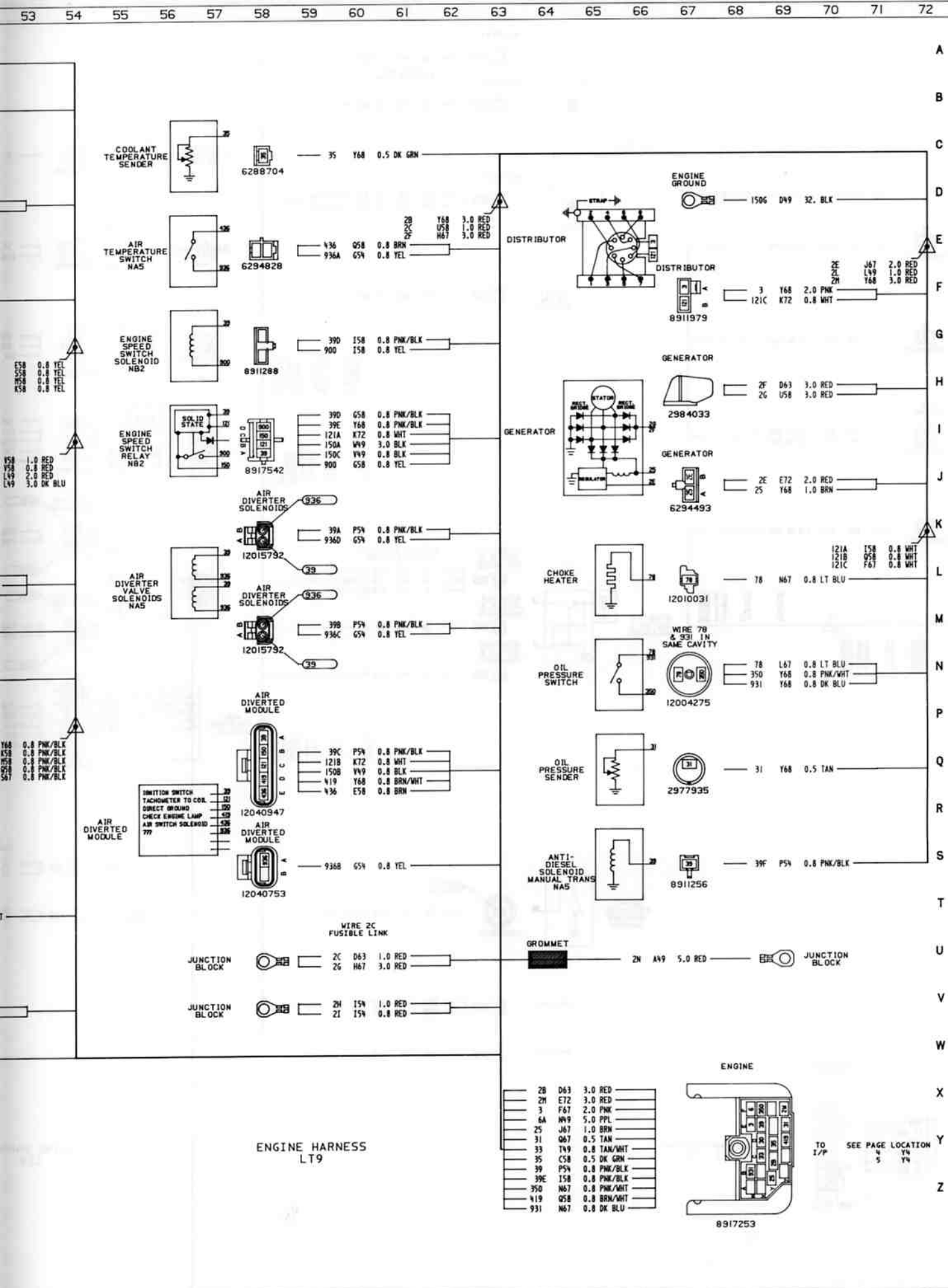
COOLANT TEMPERATURE SENDER
6288704
35 Y68 0.5 DK GRN
AIR TEMPERATURE SWITCH NA5
6294828
936 Q58 0.8 BRN
936A G54 0.8 YEL
2B Y68 3.0 RED
2C U58 1.0 RED
2F H67 3.0 RED
ENGINE SPEED SWITCH SOLENOID NB2
8911288
390 I58 0.8 PNK/BLK
900 I58 0.8 YEL
E58 0.8 YEL
S58 0.8 YEL
M58 0.8 YEL
K58 0.8 YEL
ENGINE SPEED SWITCH RELAY NB2
SOLID STATE
8917542
390 G58 0.8 PNK/BLK
39E T68 0.8 PNK/BLK
121A K72 0.8 WHT
150A W49 3.0 BLK
150C Y49 0.8 BLK
900 G58 0.8 YEL
Y58 1.0 RED
Y56 0.8 RED
L49 2.0 RED
L49 3.0 DK BLU
AIR DIVERTER SOLENOIDS
936
12015792
39
39A P54 0.8 PNK/BLK
936D G54 0.8 YEL
AIR DIVERTER VALVE SOLENOIDS NA5
AIR DIVERTER SOLENOIDS
936
12015792
39
39B P54 0.8 PNK/BLK
936C G54 0.8 YEL
AIR DIVERTED MODULE
12040947
39C P54 0.8 PNK/BLK
121B K72 0.8 WHT
150B W49 0.8 BLK
419 Y68 0.8 BRN/WHT
936 E58 0.8 BRN
Y68 0.8 PNK/BLK
K58 0.8 PNK/BLK
M58 0.8 PNK/BLK
Q58 0.8 PNK/BLK
S67 0.8 PNK/BLK
IGNITION SWITCH
TACHOMETER TO COIL
DIRECT GROUND
CHECK ENGINE LAMP
AIR SWITCH SOLENOID
???
AIR DIVERTED MODULE
12040753
936B G54 0.8 YEL
WIRE 2C FUSIBLE LINK
JUNCTION BLOCK
2C D63 1.0 RED
2G H67 3.0 RED
JUNCTION BLOCK
2H I54 1.0 RED
2I I54 0.8 RED
ENGINE GROUND
150G D49 32. BLK
DISTRIBUTOR
STRAP
DISTRIBUTOR
8911979
3 Y68 2.0 PNK
121C K72 0.8 WHT
2E J67 2.0 RED
2L L49 1.0 RED
2M Y68 3.0 RED
GENERATOR
STATOR
REGULATOR
GENERATOR
2984033
2F D63 3.0 RED
2G U58 3.0 RED
GENERATOR
6294493
2E E72 2.0 RED
25 Y68 1.0 BRN
121A I58 0.8 WHT
121B Q58 0.8 WHT
121C F67 0.8 WHT
CHOKE HEATER
12010031
78 N67 0.8 LT BLU
WIRE 78 & 931 IN SAME CAVITY
OIL PRESSURE SWITCH
12004275
78 L67 0.8 LT BLU
350 Y68 0.8 PNK/WHT
931 Y68 0.8 DK BLU
OIL PRESSURE SENDER
2977935
31 Y68 0.5 TAN
ANTI-DIESEL SOLENOID MANUAL TRANS NA5
8911256
39F P54 0.8 PNK/BLK
GROMMET
2N A49 5.0 RED
JUNCTION BLOCK
2B D63 3.0 RED
2M E72 3.0 RED
3 F67 2.0 PNK
6A W49 5.0 PPL
25 J67 1.0 BRN
31 Q67 0.5 TAN
33 T49 0.8 TAN/WHT
35 C58 0.5 DK GRN
39 P54 0.8 PNK/BLK
39E I58 0.8 PNK/BLK
350 N67 0.8 PNK/WHT
419 Q58 0.8 BRN/WHT
931 N67 0.8 DK BLU
ENGINE
8917253
TO I/P
SEE PAGE LOCATION
4 Y4
5 Y4
ENGINE HARNESS
LT9

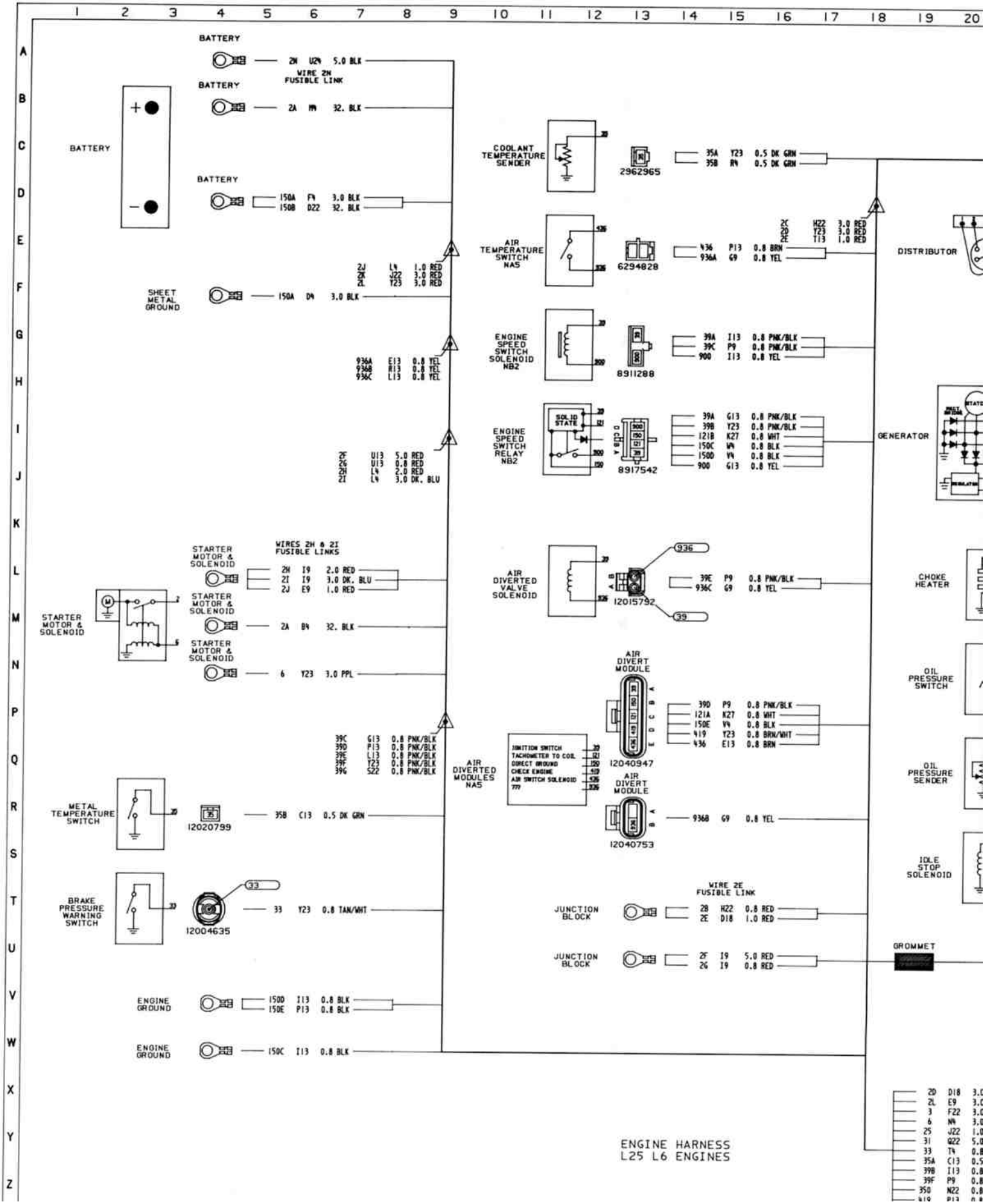
BATTERY
2N U24 5.0 BLK
WIRE 2N FUSIBLE LINK
2A M4 32. BLK
150A F4 3.0 BLK
150B D22 32. BLK
2J L4 1.0 RED
2K J22 3.0 RED
2L Y23 3.0 RED
SHEET METAL GROUND
150A D4 3.0 BLK
936A E13 0.8 YEL
936B H13 0.8 YEL
936C L13 0.8 YEL
2F U13 5.0 RED
2G U13 0.8 RED
2H L4 2.0 RED
2I L4 3.0 DK. BLU
STARTER MOTOR & SOLENOID
WIRES 2H & 2I FUSIBLE LINKS
2H I9 2.0 RED
2I I9 3.0 DK. BLU
2J E9 1.0 RED
2A B4 32. BLK
6 Y23 3.0 PPL
39C G13 0.8 PNK/BLK
39D P13 0.8 PNK/BLK
39E L13 0.8 PNK/BLK
39F Y23 0.8 PNK/BLK
39G S22 0.8 PNK/BLK
METAL TEMPERATURE SWITCH
12020799
35B C13 0.5 DK GRN
BRAKE PRESSURE WARNING SWITCH
12004635
33 Y23 0.8 TAN/WHT
ENGINE GROUND
150D I13 0.8 BLK
150E P13 0.8 BLK
150C I13 0.8 BLK
COOLANT TEMPERATURE SENDER
2962965
35A Y23 0.5 DK GRN
35B R4 0.5 DK GRN
AIR TEMPERATURE SWITCH NA5
6294828
936 P13 0.8 BRN
936A G9 0.8 YEL
2C H22 3.0 RED
2D Y23 3.0 RED
2E T13 1.0 RED
DISTRIBUTOR
ENGINE SPEED SWITCH SOLENOID NB2
8911288
39A I13 0.8 PNK/BLK
39C P9 0.8 PNK/BLK
900 I13 0.8 YEL
ENGINE SPEED SWITCH RELAY NB2
SOLID STATE
8917542
39A G13 0.8 PNK/BLK
39B Y23 0.8 PNK/BLK
121B K27 0.8 WHT
150C V4 0.8 BLK
150D V4 0.8 BLK
900 G13 0.8 YEL
GENERATOR
AIR DIVERTED VALVE SOLENOID
12015792
936
39
39E P9 0.8 PNK/BLK
936C G9 0.8 YEL
CHOKE HEATER
AIR DIVERT MODULE
12040947
39D P9 0.8 PNK/BLK
121A K27 0.8 WHT
150E V4 0.8 BLK
419 Y23 0.8 BRN/WHT
436 E13 0.8 BRN
OIL PRESSURE SWITCH
AIR DIVERTED MODULES NA5
IGNITION SWITCH
TACHOMETER TO COIL
DIRECT GROUND
CHECK ENGINE
AIR SWITCH SOLENOID
???
AIR DIVERT MODULE
12040753
936B G9 0.8 YEL
OIL PRESSURE SENDER
IDLE STOP SOLENOID
WIRE 2E FUSIBLE LINK
JUNCTION BLOCK
2B H22 0.8 RED
2E D18 1.0 RED
2F I9 5.0 RED
2G I9 0.8 RED
GROMMET
ENGINE HARNESS
L25 L6 ENGINES

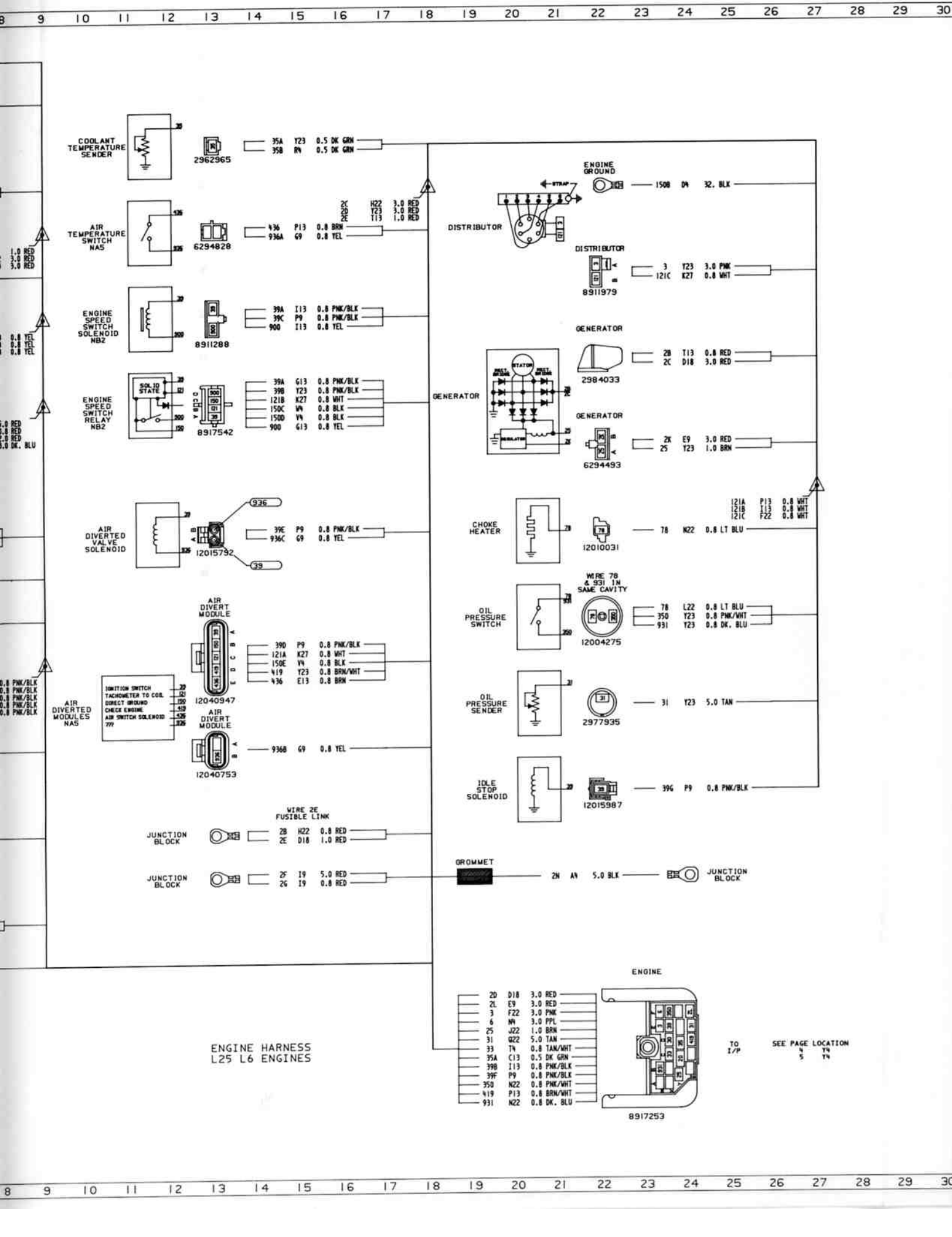
COOLANT TEMPERATURE SENDER
2962965
35A Y23 0.5 DK GRN
35B R4 0.5 DK GRN
AIR TEMPERATURE SWITCH NA5
6294828
2C H22 3.0 RED
2D Y23 3.0 RED
2E T13 1.0 RED
436 P13 0.8 BRN
936A G9 0.8 YEL
ENGINE SPEED SWITCH SOLENOID NB2
8911288
39A I13 0.8 PNK/BLK
39C P9 0.8 PNK/BLK
900 I13 0.8 YEL
ENGINE SPEED SWITCH RELAY NB2
SOLID STATE
8917542
39A G13 0.8 PNK/BLK
39B Y23 0.8 PNK/BLK
121B K27 0.8 WHT
150C V4 0.8 BLK
150D V4 0.8 BLK
900 G13 0.8 YEL
AIR DIVERTED VALVE SOLENOID
12015792
936
39
39E P9 0.8 PNK/BLK
936C G9 0.8 YEL
AIR DIVERT MODULE
12040947
390 P9 0.8 PNK/BLK
121A K27 0.8 WHT
150E V4 0.8 BLK
419 Y23 0.8 BRN/WHT
436 E13 0.8 BRN
AIR DIVERTED MODULES NA5
IGNITION SWITCH
TACHOMETER TO COIL
DIRECT GROUND
CHECK ENGINE
AIR SWITCH SOLENOID
???
AIR DIVERT MODULE
12040753
936B G9 0.8 YEL
WIRE 2E FUSIBLE LINK
JUNCTION BLOCK
2B H22 0.8 RED
2E D18 1.0 RED
JUNCTION BLOCK
2F I9 5.0 RED
2G I9 0.8 RED
ENGINE GROUND
STRAP
1508 D4 32. BLK
DISTRIBUTOR
DISTRIBUTOR
8911979
3 Y23 3.0 PNK
121C K27 0.8 WHT
GENERATOR
STATOR
REGULATOR
GENERATOR
2984033
2B T13 0.8 RED
2C D18 3.0 RED
GENERATOR
6294493
2K E9 3.0 RED
25 Y23 1.0 BRN
CHOKE HEATER
12010031
78 N22 0.8 LT BLU
121A P13 0.8 WHT
121B T13 0.8 WHT
121C F22 0.8 WHT
OIL PRESSURE SWITCH
WIRE 78 & 931 IN SAME CAVITY
12004275
78 L22 0.8 LT BLU
350 Y23 0.8 PNK/WHT
931 Y23 0.8 DK. BLU
OIL PRESSURE SENDER
2977935
31 Y23 5.0 TAN
IDLE STOP SOLENOID
12015987
39G P9 0.8 PNK/BLK
GROMMET
2N A4 5.0 BLK
JUNCTION BLOCK
ENGINE
8917253
2D D18 3.0 RED
2L E9 3.0 RED
3 F22 3.0 PNK
6 N4 3.0 PPL
25 J22 1.0 BRN
31 Q22 5.0 TAN
33 T4 0.8 TAN/WHT
35A C13 0.5 DK GRN
39B I13 0.8 PNK/BLK
39F P9 0.8 PNK/BLK
350 N22 0.8 PNK/WHT
419 P13 0.8 BRN/WHT
931 N22 0.8 DK. BLU
TO I/P
SEE PAGE LOCATION
4 T4
5 T4
ENGINE HARNESS
L25 L6 ENGINES

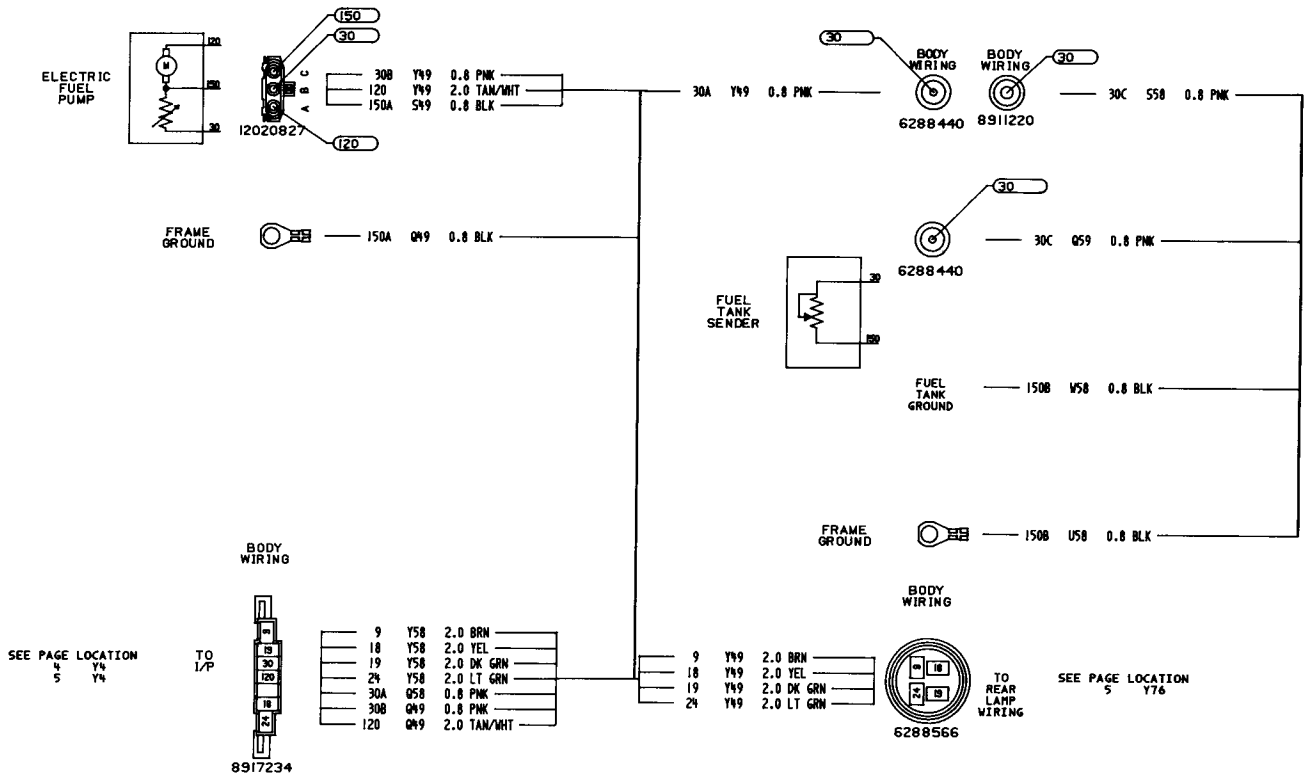
ELECTRIC FUEL PUMP
M
120
150
30
150
30
C
B
A
12020827
120
30B Y49 0.8 PNK
120 Y49 2.0 TAN/WHT
150A S49 0.8 BLK
FRAME GROUND
150A Q49 0.8 BLK
30A Y49 0.8 PNK
30
BODY WIRING
6288440
BODY WIRING
30
8911220
30C S58 0.8 PNK
30
6288440
30C Q59 0.8 PNK
FUEL TANK SENDER
30
150
FUEL TANK GROUND
150B W58 0.8 BLK
FRAME GROUND
150B U58 0.8 BLK
BODY WIRING
SEE PAGE LOCATION
4 Y4
5 Y4
TO I/P
19
30
120
18
30A
8917234
9 Y58 2.0 BRN
18 Y58 2.0 YEL
19 Y58 2.0 DK GRN
24 Y58 2.0 LT GRN
30A Q58 0.8 PNK
30B Q49 0.8 PNK
120 Q49 2.0 TAN/WHT
9 Y49 2.0 BRN
18 Y49 2.0 YEL
19 Y49 2.0 DK GRN
24 Y49 2.0 LT GRN
BODY WIRING
18
19
6288566
TO REAR LAMP WIRING
SEE PAGE LOCATION
5 Y76

BODY WIRING

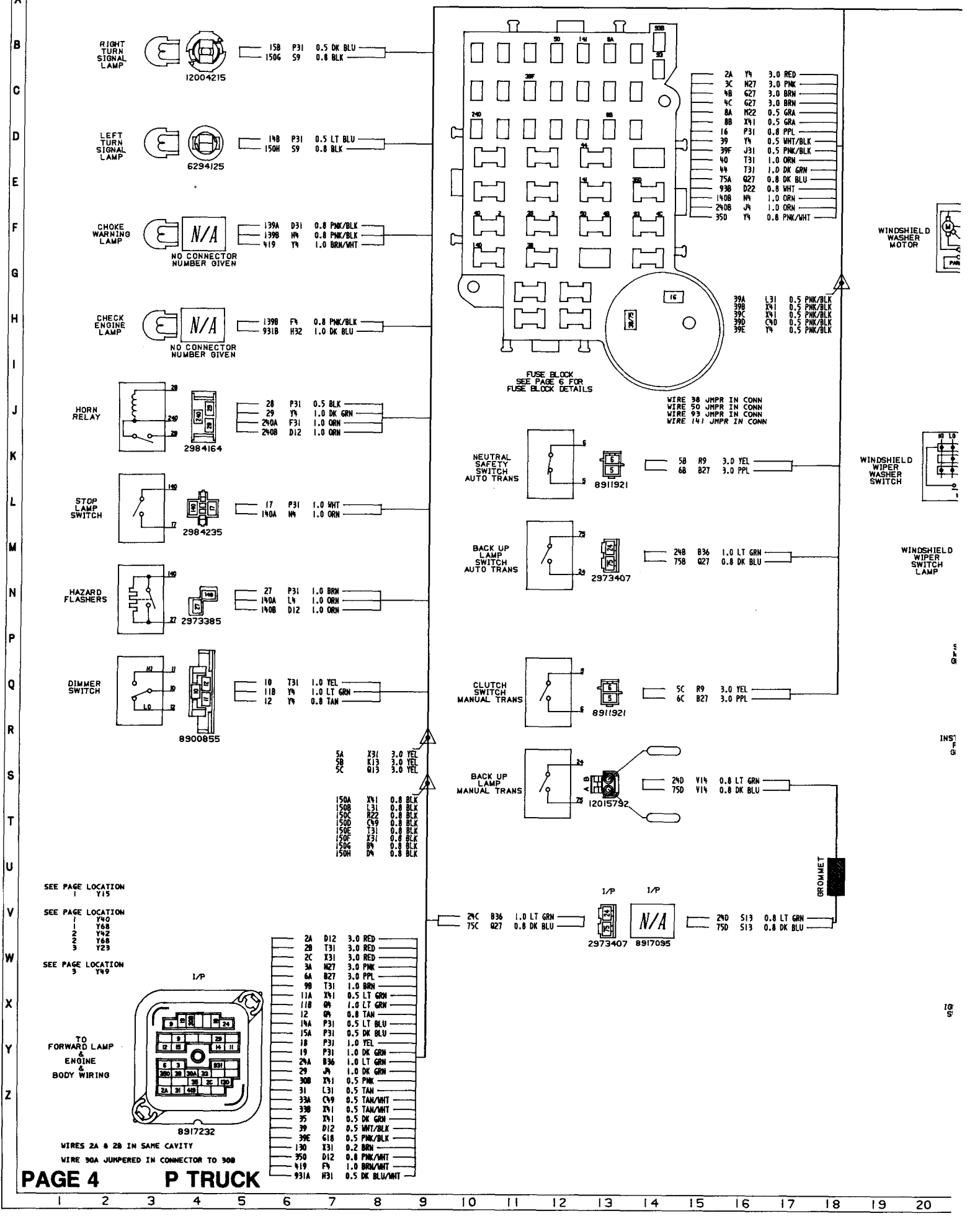
RIGHT TURN SIGNAL LAMP
12004215
15B P31 0.5 DK BLU
150G S9 0.8 BLK
LEFT TURN SIGNAL LAMP
6294125
14B P31 0.5 LT BLU
150H S9 0.8 BLK
CHOKE WARNING LAMP
N/A
NO CONNECTOR NUMBER GIVEN
139A D31 0.8 PNK/BLK
139B H4 0.8 PNK/BLK
419 Y4 1.0 BRN/WHT
CHECK ENGINE LAMP
N/A
NO CONNECTOR NUMBER GIVEN
139B F4 0.8 PNK/BLK
931B H32 1.0 DK BLU
HORN RELAY
2984164
28 P31 0.5 BLK
29 Y4 1.0 DK GRN
240A F31 1.0 ORN
240B D12 1.0 ORN
STOP LAMP SWITCH
2984235
17 P31 1.0 WHT
140A N4 1.0 ORN
HAZARD FLASHERS
2973385
27 P31 1.0 BRN
140A L4 1.0 ORN
140B D12 1.0 ORN
DIMMER SWITCH
8900855
10 T31 1.0 YEL
11B Y4 1.0 LT GRN
12 Y4 0.8 TAN
5A X31 3.0 YEL
5B K13 3.0 YEL
5C Q13 3.0 YEL
150A X41 0.8 BLK
150B L31 0.8 BLK
150C R22 0.8 BLK
150D C49 0.8 BLK
150E T31 0.8 BLK
150F X31 0.8 BLK
150G B4 0.8 BLK
150H D4 0.8 BLK
2A Y4 3.0 RED
3C N27 3.0 PNK
4B G27 3.0 BRN
4C G27 3.0 BRN
8A M22 0.5 GRA
8B X41 0.5 GRA
16 P31 0.8 PPL
39 Y4 0.5 WHT/BLK
39F J31 0.5 PNK/BLK
40 T31 1.0 ORN
44 T31 1.0 DK GRN
75A Q27 0.8 DK BLU
93B D22 0.8 WHT
140B N4 1.0 ORN
240B J4 1.0 ORN
350 Y4 0.8 PNK/WHT
39A L31 0.5 PNK/BLK
39B X41 0.5 PNK/BLK
39C X41 0.5 PNK/BLK
39D C40 0.5 PNK/BLK
39E Y4 0.5 PNK/BLK
FUSE BLOCK
SEE PAGE 6 FOR FUSE BLOCK DETAILS
WIRE 38 JMPR IN CONN
WIRE 50 JMPR IN CONN
WIRE 93 JMPR IN CONN
WIRE 141 JMPR IN CONN
WINDSHIELD WASHER MOTOR
NEUTRAL SAFETY SWITCH AUTO TRANS
8911921
5B R9 3.0 YEL
6B B27 3.0 PPL
WINDSHIELD WIPER WASHER SWITCH
BACK UP LAMP SWITCH AUTO TRANS
2973407
24B B36 1.0 LT GRN
75B Q27 0.8 DK BLU
WINDSHIELD WIPER SWITCH LAMP
CLUTCH SWITCH MANUAL TRANS
8911921
5C R9 3.0 YEL
6C B27 3.0 PPL
BACK UP LAMP MANUAL TRANS
12015792
24D V14 0.8 LT GRN
75D V14 0.8 DK BLU
GROMMET
24C B36 1.0 LT GRN
75C Q27 0.8 DK BLU
I/P
2973407
I/P
N/A
8917095
24D S13 0.8 LT GRN
75D S13 0.8 DK BLU
SEE PAGE LOCATION
1 Y15
SEE PAGE LOCATION
1 Y40
1 Y68
2 Y42
2 Y68
3 Y23
SEE PAGE LOCATION
3 Y49
I/P
TO FORWARD LAMP & ENGINE & BODY WIRING
8917232
WIRES 2A & 2B IN SAME CAVITY
WIRE 30A JUMPERED IN CONNECTOR TO 30B
2A D12 3.0 RED
2B T31 3.0 RED
2C X31 3.0 RED
3A N27 3.0 PNK
6A B27 3.0 PPL
9B T31 1.0 BRN
11A X41 0.5 LT GRN
11B Q4 1.0 LT GRN
12 Q4 0.8 TAN
14A P31 0.5 LT BLU
15A P31 0.5 DK BLU
18 P31 1.0 YEL
19 P31 1.0 DK GRN
24A B36 1.0 LT GRN
29 J4 1.0 DK GRN
30B X41 0.5 PNK
31 L31 0.5 TAN
33A C49 0.5 TAN/WHT
33B X41 0.5 TAN/WHT
35 X41 0.5 DK GRN
39 D12 0.5 WHT/BLK
39E G18 0.5 PNK/BLK
130 X31 0.2 BRN
350 D12 0.8 PNK/WHT
419 F4 1.0 BRN/WHT
931A H31 0.5 DK BLU/WHT

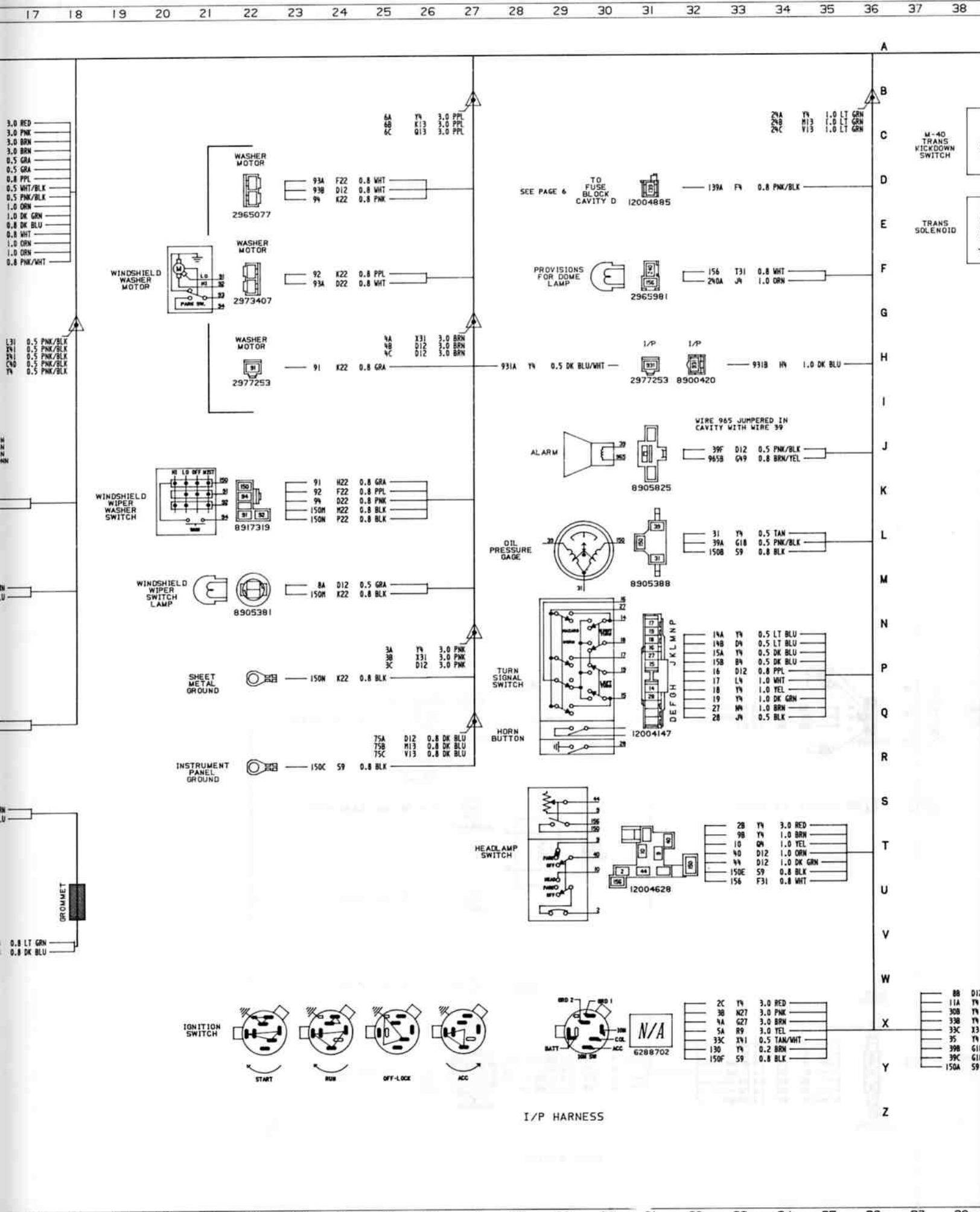
WASHER MOTOR
2965077
WASHER MOTOR
2973407
WASHER MOTOR
2977253
WINDSHIELD WASHER MOTOR
PARK SW.
WINDSHIELD WIPER WASHER SWITCH
8917319
WINDSHIELD WIPER SWITCH LAMP
8905381
SHEET METAL GROUND
INSTRUMENT PANEL GROUND
GROMMET
SEE PAGE 6
TO FUSE BLOCK CAVITY D
12004885
PROVISIONS FOR DOME LAMP
2965981
I/P
2977253
I/P
8900420
WIRE 965 JUMPERED IN CAVITY WITH WIRE 39
ALARM
8905825
OIL PRESSURE GAGE
8905388
TURN SIGNAL SWITCH
HORN BUTTON
12004147
HEADLAMP SWITCH
12004628
M-40 TRANS KICKDOWN SWITCH
TRANS SOLENOID
IGNITION SWITCH
START
RUN
OFF-LOCK
ACC
N/A
6288702
I/P HARNESS

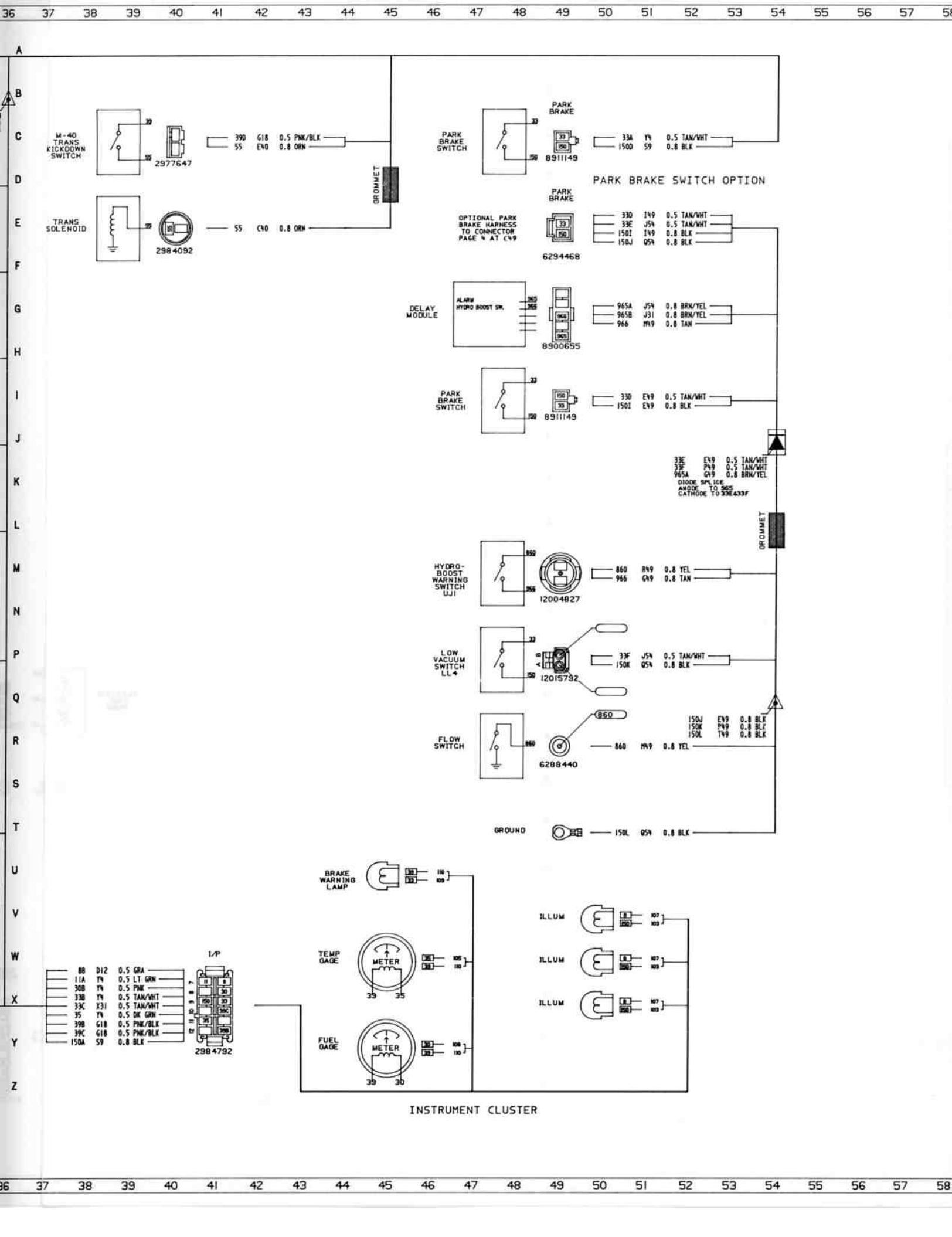

INSTRUMENT CLUSTER

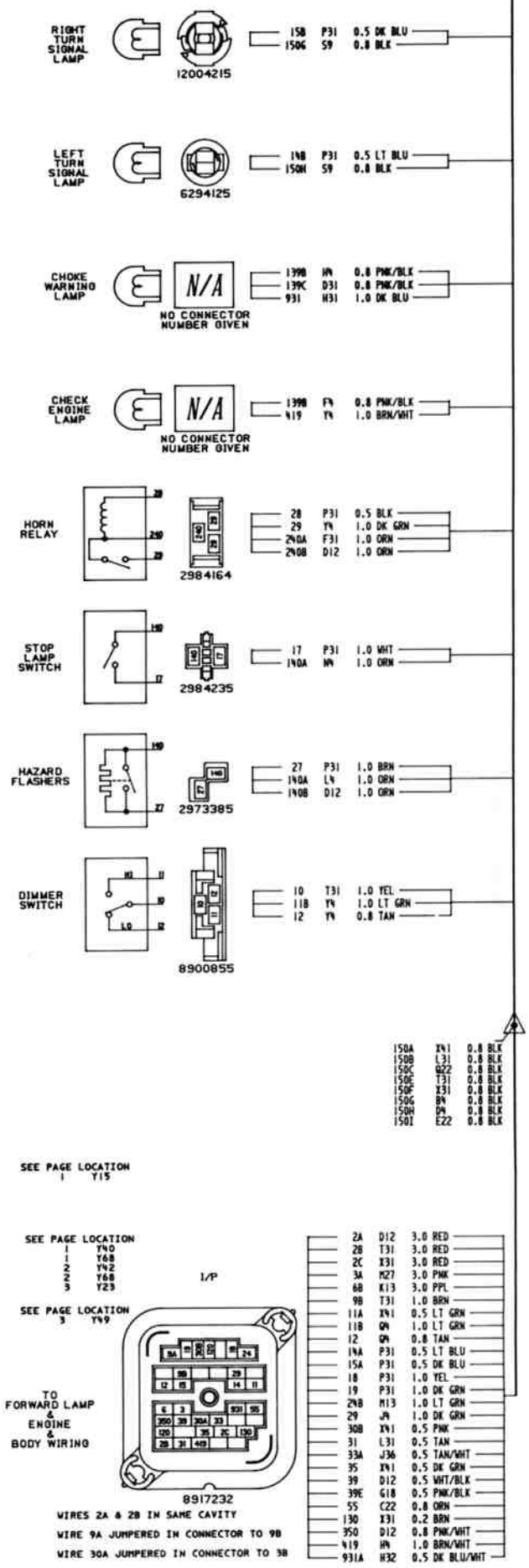
RIGHT TURN SIGNAL LAMP
12004215
158 P31 0.5 DK BLU
150G S9 0.8 BLK
LEFT TURN SIGNAL LAMP
6294125
148 P31 0.5 LT BLU
150H S9 0.8 BLK
CHOKE WARNING LAMP
N/A
NO CONNECTOR NUMBER GIVEN
139B HA 0.8 PNK/BLK
139K D31 0.8 PNK/BLK
931 H31 1.0 DK BLU
CHECK ENGINE LAMP
N/A
NO CONNECTOR NUMBER GIVEN
139B F4 0.8 PNK/BLK
419 T4 1.0 BRN/WHT
HORN RELAY
2984164
28 P31 0.5 BLK
29 T4 1.0 DK GRN
240A F31 1.0 ORN
240B D12 1.0 ORN
STOP LAMP SWITCH
2984235
17 P31 1.0 WHT
140A HA 1.0 ORN
HAZARD FLASHERS
2973385
27 P31 1.0 BRN
140A L4 1.0 ORN
140B D12 1.0 ORN
DIMMER SWITCH
8900855
10 T31 1.0 YEL
11B T4 1.0 LT GRN
12 T4 0.8 TAN
150A I41 0.8 BLK
150B L31 0.8 BLK
150C Q22 0.8 BLK
150E T31 0.8 BLK
150F X31 0.8 BLK
150G B4 0.8 BLK
150H D4 0.8 BLK
150I E22 0.8 BLK
SEE PAGE LOCATION
1 Y15
SEE PAGE LOCATION
1 Y40
1 Y68
2 Y42
2 Y68
3 Y23
I/P
SEE PAGE LOCATION
3 Y49
TO FORWARD LAMP & ENGINE & BODY WIRING
8917232
2A D12 3.0 RED
2B T31 3.0 RED
2C X31 3.0 RED
3A M27 3.0 PNK
6B K13 3.0 PPL
9B T31 1.0 BRN
11A X41 0.5 LT GRN
11B Q4 1.0 LT GRN
12 Q4 0.8 TAN
14A P31 0.5 LT BLU
15A P31 0.5 DK BLU
18 P31 1.0 YEL
19 P31 1.0 DK GRN
24B M13 1.0 LT GRN
29 J4 1.0 DK GRN
30B X41 0.5 PNK
31 L31 0.5 TAN
33A J36 0.5 TAN/WHT
35 X41 0.5 DK GRN
39 D12 0.5 WHT/BLK
39E G18 0.5 PNK/BLK
55 C22 0.8 ORN
130 X31 0.2 BRN
350 D12 0.8 PNK/WHT
419 H4 1.0 BRN/WHT
931A H32 0.5 DK BLU/WHT
WIRES 2A & 2B IN SAME CAVITY
WIRE 9A JUMPERED IN CONNECTOR TO 9B
WIRE 30A JUMPERED IN CONNECTOR TO 3B

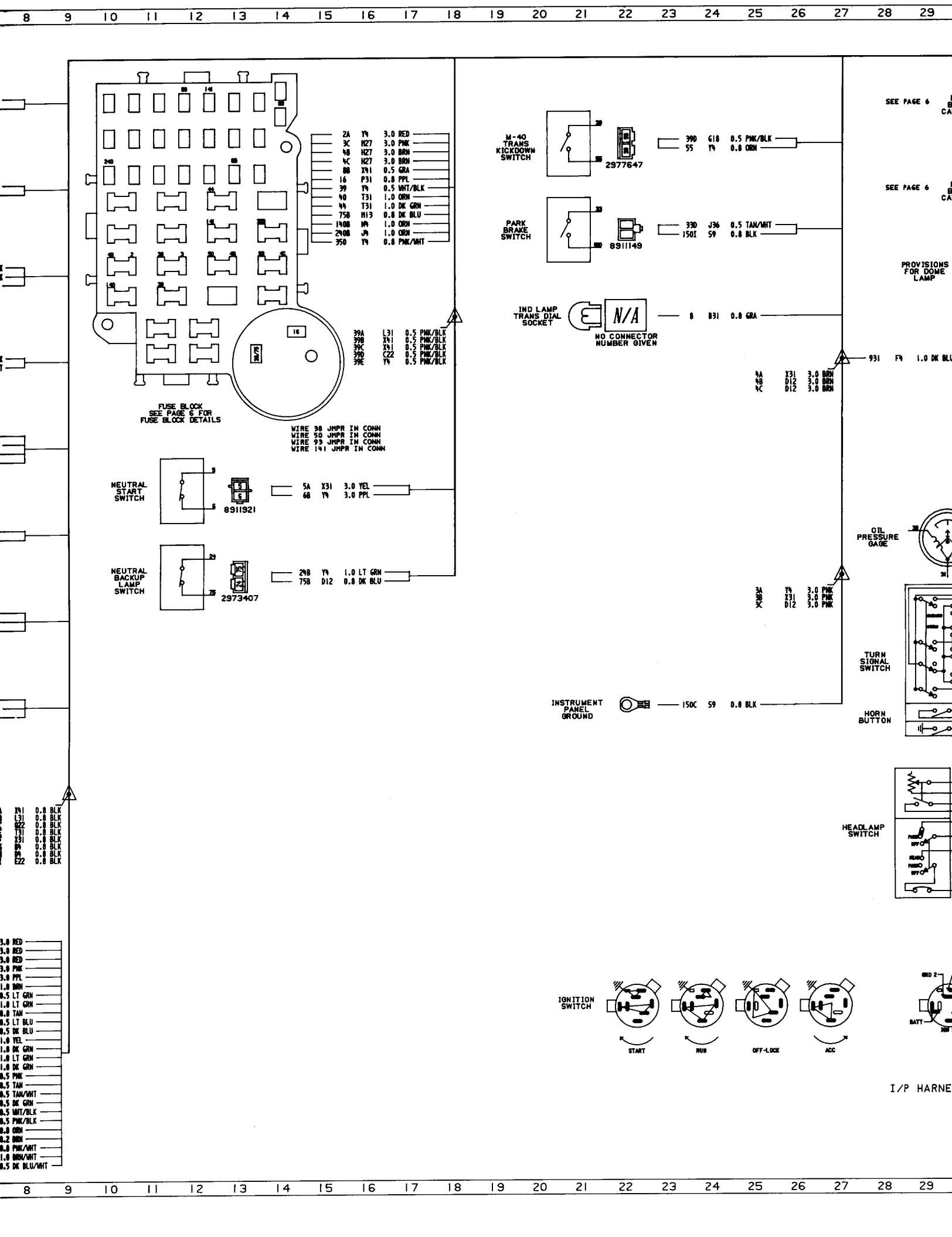
8 9 10 11 12 13 14 15 16 17 18 19 20 21 22 23 24 25 26 27 28 29
2A Y4 3.0 RED
3C H27 3.0 PNK
4B H27 3.0 BRN
4C H27 3.0 BRN
8B X41 0.5 GRA
16 P31 0.8 PPL
39 Y4 0.5 WHT/BLK
40 T31 1.0 ORN
44 T31 1.0 DK GRN
75B H13 0.8 DK BLU
140B N4 1.0 ORN
240B J4 1.0 ORN
350 Y4 0.8 PNK/WHT
39A L31 0.5 PNK/BLK
39B X41 0.5 PNK/BLK
39C X41 0.5 PNK/BLK
39D C22 0.5 PNK/BLK
39E Y4 0.5 PNK/BLK
FUSE BLOCK
SEE PAGE 6 FOR
FUSE BLOCK DETAILS
WIRE 38 JMPR IN CONN
WIRE 50 JMPR IN CONN
WIRE 99 JMPR IN CONN
WIRE 141 JMPR IN CONN
NEUTRAL START SWITCH
8911921
5A X31 3.0 YEL
6B Y4 3.0 PPL
NEUTRAL BACKUP LAMP SWITCH
2973407
24B Y4 1.0 LT GRN
75B D12 0.8 DK BLU
M-40 TRANS KICKDOWN SWITCH
2977647
39D G18 0.5 PNK/BLK
55 Y4 0.8 ORN
PARK BRAKE SWITCH
8911149
33D J36 0.5 TAN/WHT
150I S9 0.8 BLK
IND LAMP TRANS DIAL SOCKET
N/A
NO CONNECTOR NUMBER GIVEN
8 B31 0.8 GRA
SEE PAGE 6
SEE PAGE 6
PROVISIONS FOR DOME LAMP
931 F4 1.0 DK BLU
4A X31 3.0 BRN
4B D12 3.0 BRN
4C D12 3.0 BRN
OIL PRESSURE GAGE
3A Y4 3.0 PNK
3B X31 3.0 PNK
3C D12 3.0 PNK
TURN SIGNAL SWITCH
INSTRUMENT PANEL GROUND
150C S9 0.8 BLK
HORN BUTTON
HEADLAMP SWITCH
X41 0.8 BLK
L31 0.8 BLK
G22 0.8 BLK
T31 0.8 BLK
X31 0.8 BLK
B4 0.8 BLK
B4 0.8 BLK
E22 0.8 BLK
3.0 RED
3.0 RED
3.0 RED
3.0 PNK
3.0 PPL
1.0 BRN
0.5 LT GRN
1.0 LT GRN
0.8 TAN
0.5 LT BLU
0.5 DK BLU
1.0 YEL
1.0 DK GRN
1.0 LT GRN
1.0 DK GRN
0.5 PNK
0.5 TAN
0.5 TAN/WHT
0.5 DK GRN
0.5 WHT/BLK
0.5 PNK/BLK
0.8 ORN
0.2 BRN
0.8 PNK/WHT
1.0 BRN/WHT
0.5 DK BLU/WHT
IGNITION SWITCH
START
RUN
OFF-LOCK
ACC
GND 2
BATT
I/P HARNE

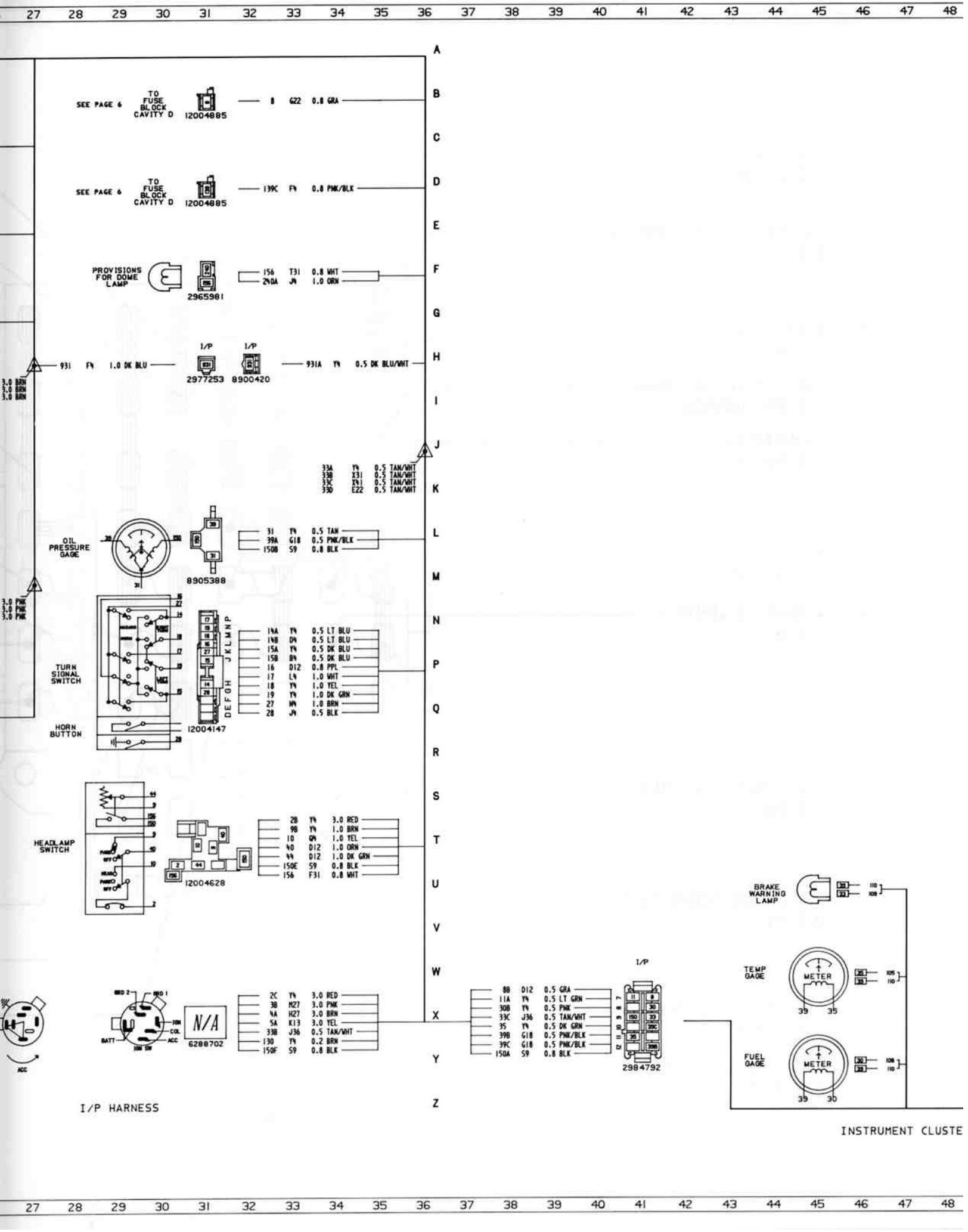
SEE PAGE 6
TO FUSE BLOCK CAVITY D
12004885
8 G22 0.8 GRA
SEE PAGE 6
TO FUSE BLOCK CAVITY D
12004885
139K F9 0.8 PNK/BLK
PROVISIONS FOR DOME LAMP
2965981
156 T31 0.8 WHT
240A J9 1.0 ORN
I/P
I/P
931 F9 1.0 DK BLU
2977253
8900420
931A T9 0.5 DK BLU/WHT
33A T9 0.5 TAN/WHT
33B X31 0.5 TAN/WHT
33C T41 0.5 TAN/WHT
33D E22 0.5 TAN/WHT
OIL PRESSURE GAGE
8905388
31 T9 0.5 TAN
39A G18 0.5 PNK/BLK
150B S9 0.8 BLK
TURN SIGNAL SWITCH
HORN BUTTON
12004147
14A T9 0.5 LT BLU
14B D9 0.5 LT BLU
15A T9 0.5 DK BLU
15B B9 0.5 DK BLU
16 D12 0.8 PPL
17 L9 1.0 WHT
18 T9 1.0 YEL
19 T9 1.0 DK GRN
27 M9 1.0 BRN
28 J9 0.5 BLK
HEADLAMP SWITCH
12004628
28 T9 3.0 RED
9B T9 1.0 BRN
10 Q9 1.0 YEL
40 D12 1.0 ORN
44 D12 1.0 DK GRN
150E S9 0.8 BLK
156 F31 0.8 WHT
N/A
6288702
2C T9 3.0 RED
3B M27 3.0 PNK
4A H27 3.0 BRN
5A K13 3.0 YEL
33B J36 0.5 TAN/WHT
130 T9 0.2 BRN
150F S9 0.8 BLK
I/P HARNESS
I/P
2984792
8B D12 0.5 GRA
11A T9 0.5 LT GRN
30B T9 0.5 PNK
33C J36 0.5 TAN/WHT
35 T9 0.5 DK GRN
39B G18 0.5 PNK/BLK
39C G18 0.5 PNK/BLK
150A S9 0.8 BLK
BRAKE WARNING LAMP
TEMP GAGE
METER
FUEL GAGE
METER
INSTRUMENT CLUSTE

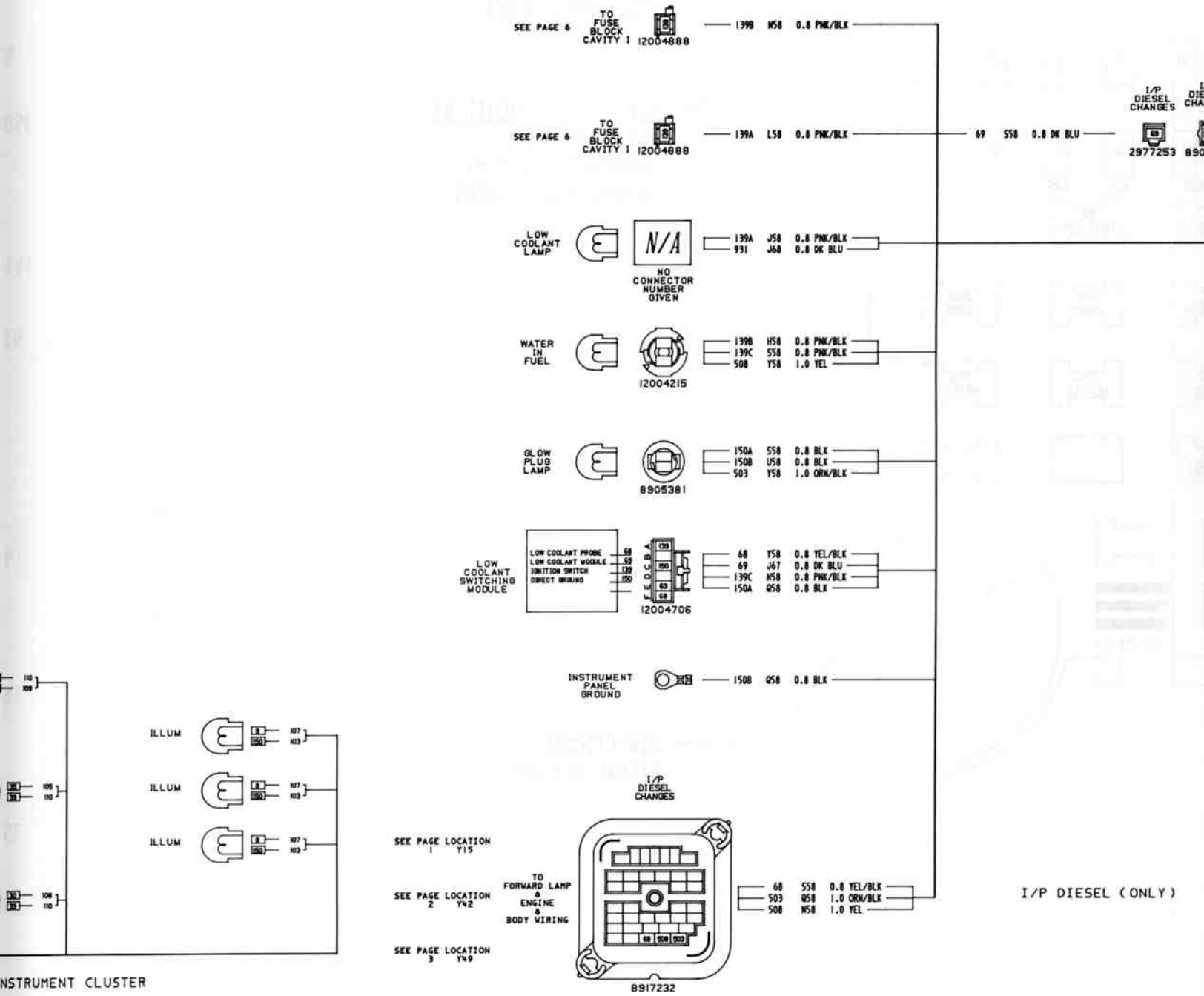
SEE PAGE 6
TO FUSE BLOCK CAVITY 1
12004888
139B H58 0.8 PNK/BLK
SEE PAGE 6
TO FUSE BLOCK CAVITY 1
12004888
139A L58 0.8 PNK/BLK
69 S58 0.8 DK BLU
I/P DIESEL CHANGES
2977253
LOW COOLANT LAMP
N/A
NO CONNECTOR NUMBER GIVEN
139A J58 0.8 PNK/BLK
931 J68 0.8 DK BLU
WATER IN FUEL
12004215
139B H58 0.8 PNK/BLK
139C S58 0.8 PNK/BLK
508 Y58 1.0 YEL
GLOW PLUG LAMP
8905381
150A S58 0.8 BLK
150B U58 0.8 BLK
503 Y58 1.0 ORN/BLK
LOW COOLANT SWITCHING MODULE
LOW COOLANT PROBE
LOW COOLANT MODULE
IGNITION SWITCH
DIRECT GROUND
12004706
68 Y58 0.8 YEL/BLK
69 J67 0.8 DK BLU
139C N58 0.8 PNK/BLK
150A Q58 0.8 BLK
INSTRUMENT PANEL GROUND
150B Q58 0.8 BLK
ILLUM
ILLUM
ILLUM
INSTRUMENT CLUSTER
I/P DIESEL CHANGES
SEE PAGE LOCATION 1 Y15
SEE PAGE LOCATION 2 Y42
SEE PAGE LOCATION 3 Y49
TO FORWARD LAMP & ENGINE & BODY WIRING
68 S58 0.8 YEL/BLK
503 Q58 1.0 ORN/BLK
508 N58 1.0 YEL
8917232
I/P DIESEL (ONLY)

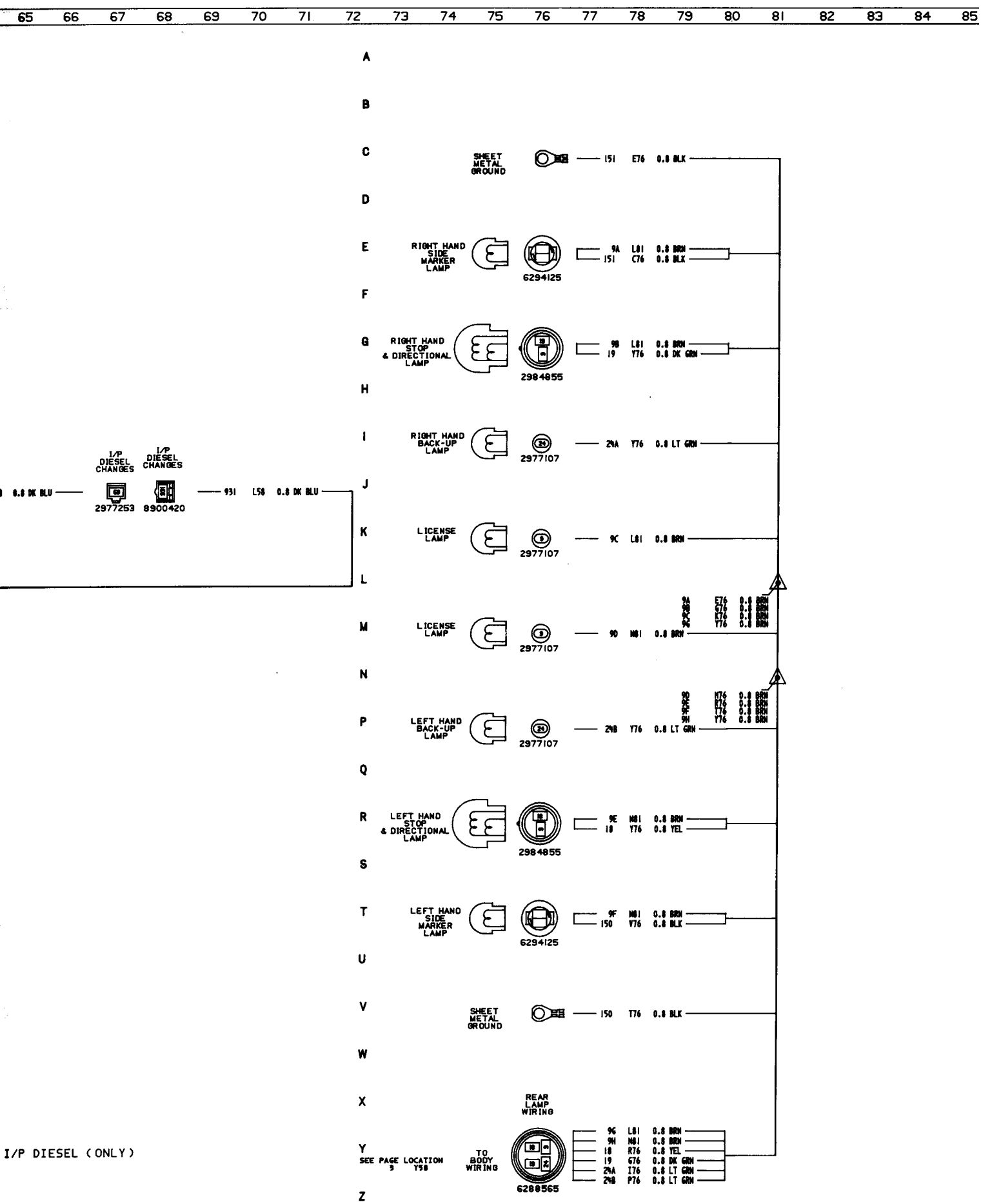

REAR LAMP WIRING
P32/P42

P TRUCK

CAVITY 'W' CIRCUIT 50
IGNITION "ON" 25A FUSED FEED
-HEATER & A/C

CAVITY 'B' CIRCUIT 140
BATTERY 15A FUSED FEED
-CLOCK
-CIGAR LIGHTER
-DOOR JAMB SWITCH
-DOME/CARGO LAMPS

CAVITY 'I' CIRCUIT 39
IGNITION "ON & CRANK" 20A FUSED FEED
-AUTO TRANS
-DIESEL INDICATOR LAMP
-BRAKE WARNING
-LOW COOLANT INDICATOR/CHOKE LAMPS
-FUEL PUMP FEED

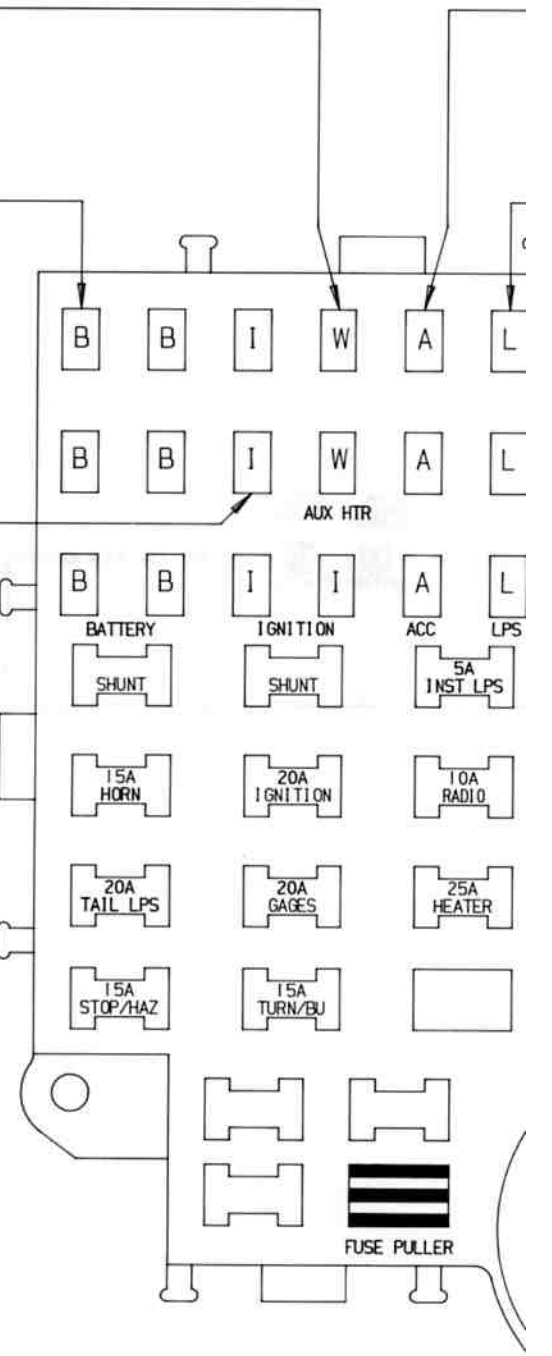

	COLOR	MALE CONNECTOR
A	BRN	12004887
B	BLK	12004886
H	DK GRA	12004740
I	WHT	12004888
L	GRN	12004885
P	RED	12004883
W	BLU	12004884

FUSES	AMP	COLOR
12004003 ND	3	VIO
12004006 ND	75	BRN
12004005 ND	5	TAN
12004007 ND	10	RED
12004009 ND	20	YEL
12004010 ND	25	WHT
12004011 ND	30	LT GRN

ND SHOWN ON 12004001

12034359 FUSE BLOCK

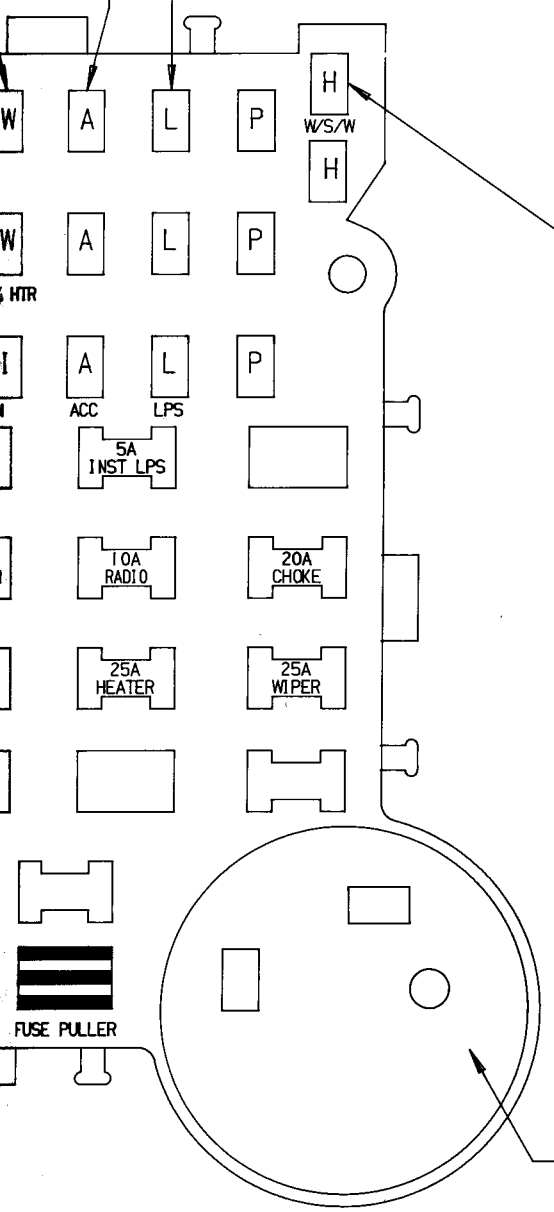

CAVITY 'A' CIRCUIT 141
IGNITION "ON & ACC" 10A FUSED FEED
-RADIO

CAVITY 'L' CIRCUIT 8
PANEL LAMPS 5A FUSED FEED
-WINDSHIELD WIPERS SWITCH ILLUMINATION (42)
-TRANSMISSION INDICATOR LAMP
-RADIO DIAL
-TILT WHEEL (32)

CAVITY 'H' CIRCUIT 93
25A FUSED FEED
-WINDSHIELD WIPERS
-WINDSHIELD WASHERS

DIRECTIONAL
SIGNAL FLASHER

A
B
C 44
D
E 8
F
G 93
H
I 4
J 350
K
L
141
M
N 93
P
Q
R
S 4
T
U 16
V
W
X 75
Y 38
Z

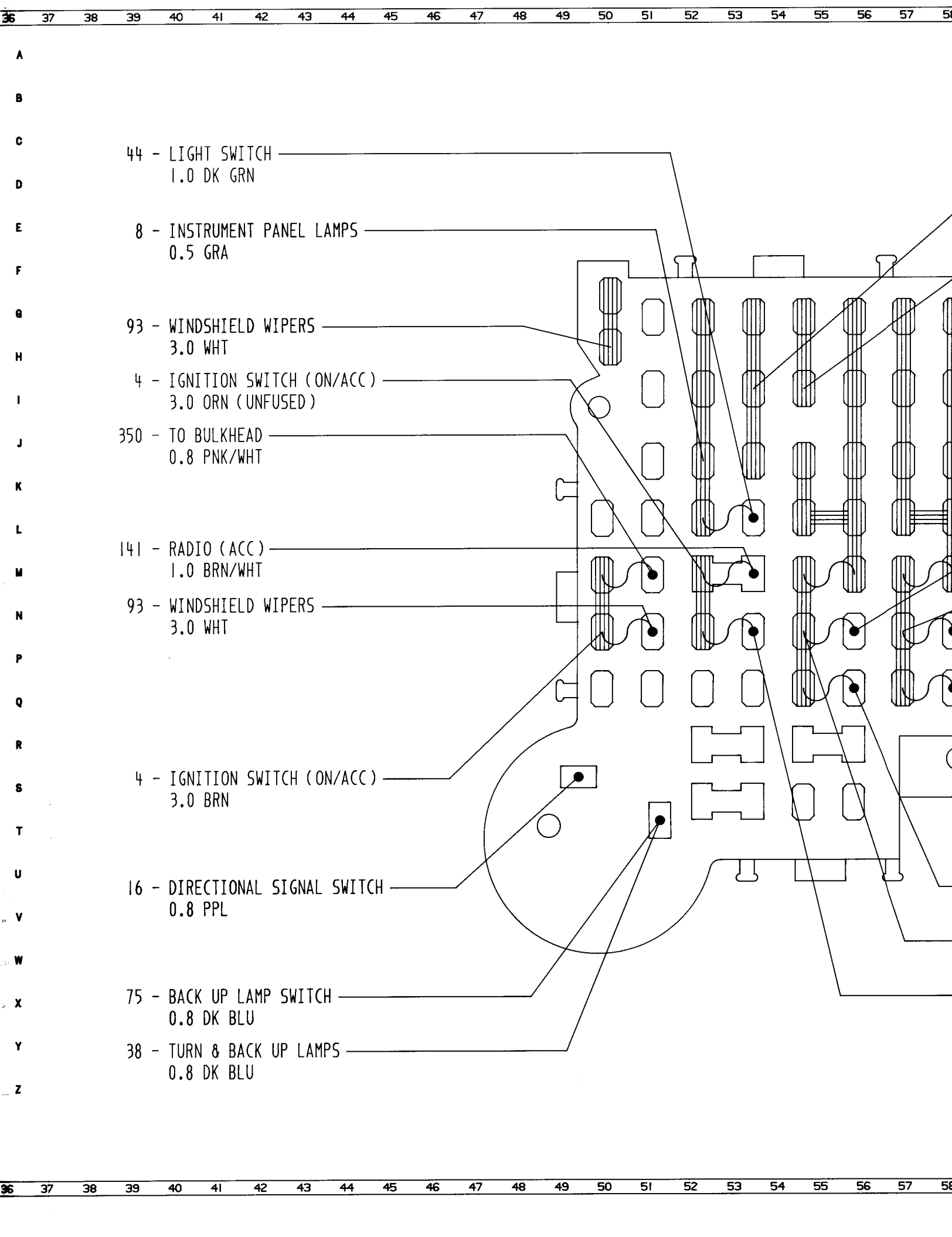
44 - LIGHT SWITCH
1.0 DK GRN
8 - INSTRUMENT PANEL LAMPS
0.5 GRA
93 - WINDSHIELD WIPERS
3.0 WHT
4 - IGNITION SWITCH (ON/ACC)
3.0 ORN (UNFUSED)
350 - TO BULKHEAD
0.8 PNK/WHT
141 - RADIO (ACC)
1.0 BRN/WHT
93 - WINDSHIELD WIPERS
3.0 WHT
4 - IGNITION SWITCH (ON/ACC)
3.0 BRN
16 - DIRECTIONAL SIGNAL SWITCH
0.8 PPL
75 - BACK UP LAMP SWITCH
0.8 DK BLU
38 - TURN & BACK UP LAMPS
0.8 DK BLU

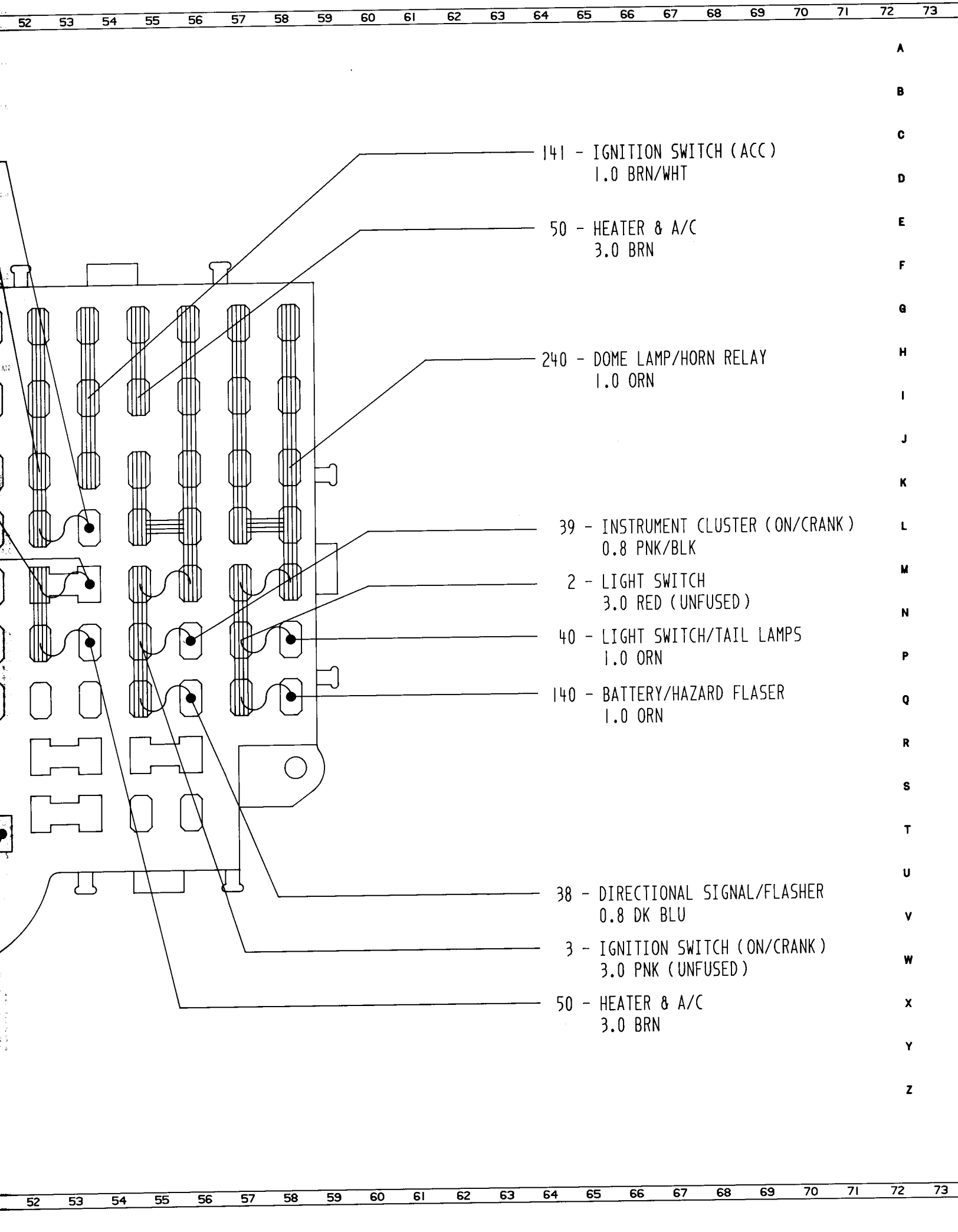
141 - IGNITION SWITCH (ACC)
1.0 BRN/WHT
50 - HEATER & A/C
3.0 BRN
240 - DOME LAMP/HORN RELAY
1.0 ORN
39 - INSTRUMENT CLUSTER (ON/CRANK)
0.8 PNK/BLK
2 - LIGHT SWITCH
3.0 RED (UNFUSED)
40 - LIGHT SWITCH/TAIL LAMPS
1.0 ORN
140 - BATTERY/HAZARD FLASER
1.0 ORN
38 - DIRECTIONAL SIGNAL/FLASHER
0.8 DK BLU
3 - IGNITION SWITCH (ON/CRANK)
3.0 PNK (UNFUSED)
50 - HEATER & A/C
3.0 BRN

Chevrolet

10-30 SERIES 1986 LIGHT DUTY TRUCK

Wiring Diagrams

CHEVROLET GM

ST-330-86 WD